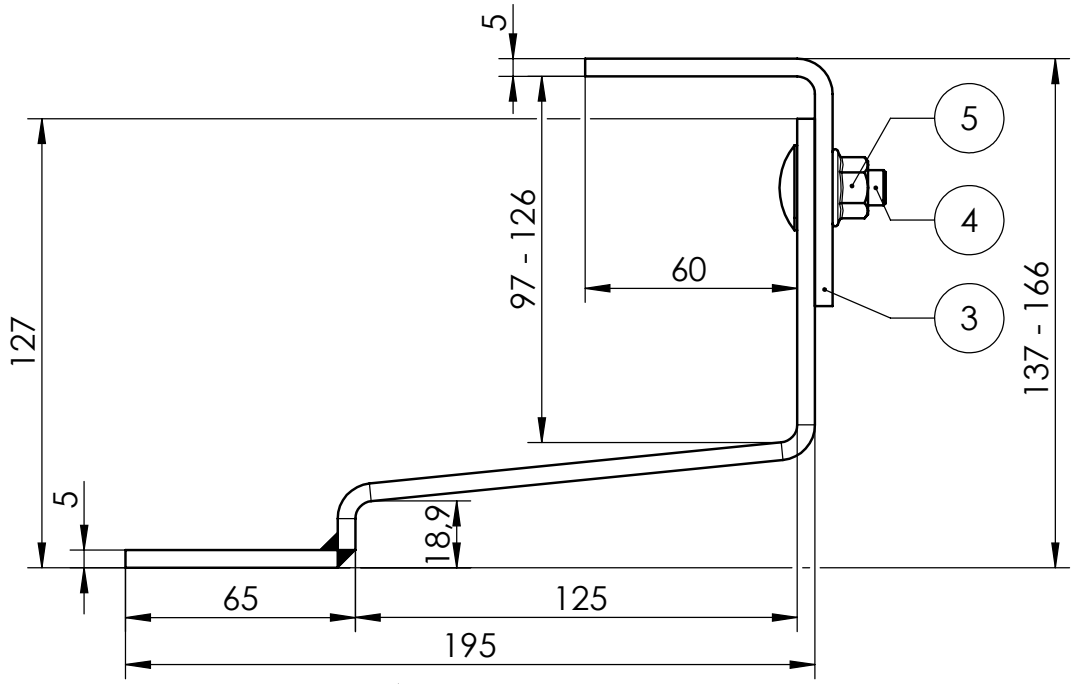

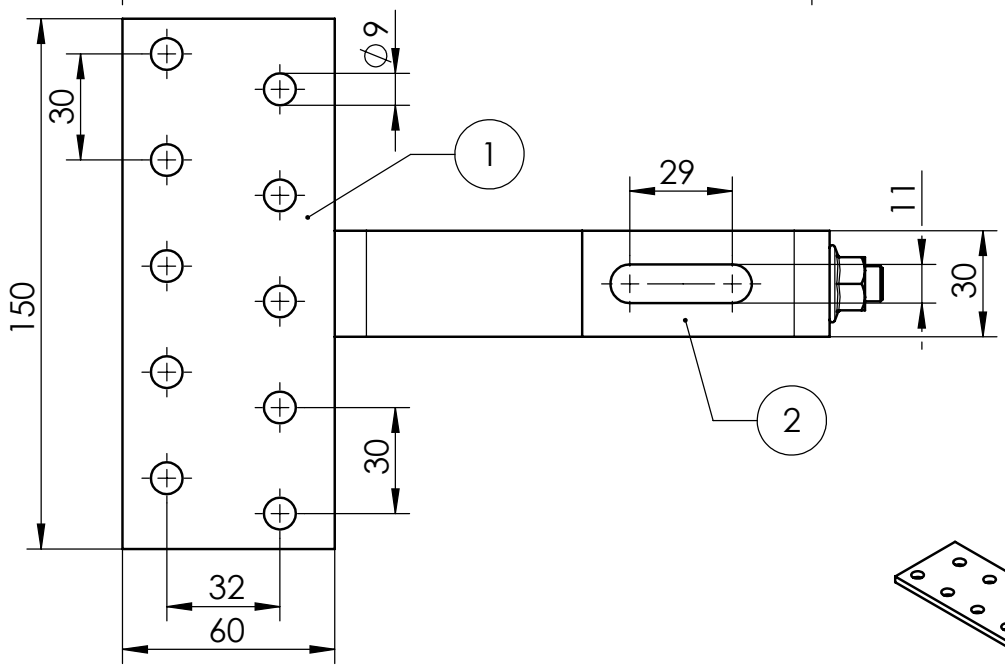

Isometrie
1 : 5

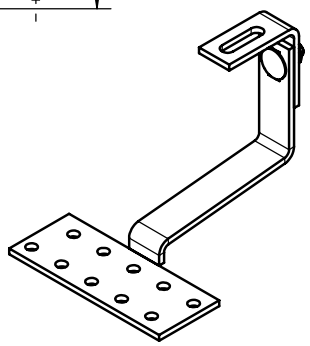

Pos.No.	Designation	Material	Quantity
1	SolidHook VAR1 COP H18 153 30x5 Base plate	1.4016 acc. to EN 10088-2 min Rp0,2=260N/mm²	1
2	SolidHook VAR1 COP H18 153 30x5 Bracket	1.4016 acc. to EN 10088-2 min Rp0,2=260N/mm²	1
3	SolidHook VAR1 COP H18 153 30x5 Angle	1.4016 acc. to EN 10088-2 min Rp0,2=260N/mm²	1
4	mushroom head square neck bolt - ISO 8677	A2-70	1
5	hexagon flange nut DIN6923_ISO 4161	A2-70	1

K2 Systems GmbH
Industriestr. 18
71272 Renningen
Germany
+49 7159 42059-0

Designation:

Data sheet SolidHook VAR1 COP H18 153 30x5

	Name	Date	Material:	Item no.:	
Designed	Stegmaier	02.12.2008	see table	1001068	A4
Approved	B. Koch	10.01.2023	Surface: sandblasted	Drawing no.: 02-022-04	All dimensions in mm
Last change	A. Soumpalas	10.01.2023	Weight: ca. 752.2 g/pc	Scale: 1:2	Sheet 1 of 1

This drawing is the sole property of K2 Systems GmbH. It is protected by copyright and may only be copied, reproduced or distributed to a third party with explicit permission!