

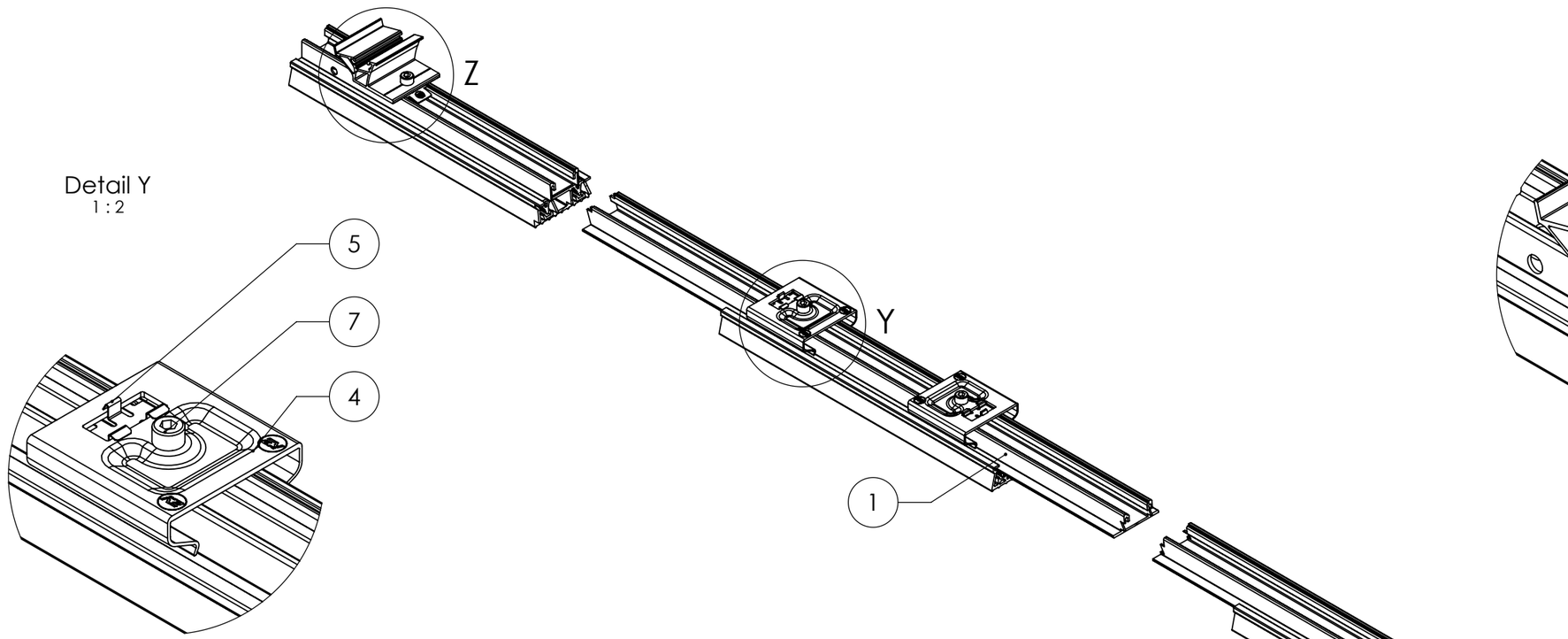

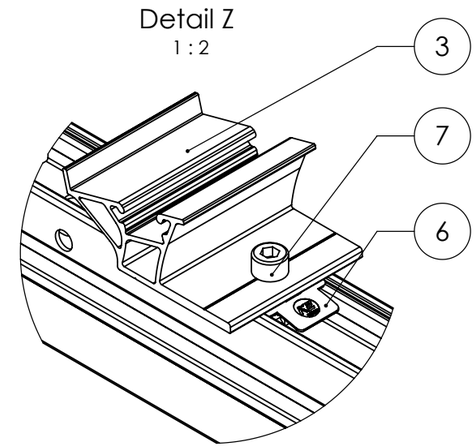

Pos.No.	Designation	Material	Quantity
1	Dome 6 BasicRail Hybrid 2,48m	EN AW 6063 T66	1
2	Dome Mat S 380	EPDM 70 Shore A	3
3	Dome 6.15 SD	EN AW 6063 T66	2
4	Dome 6 EndPlate	EN AW 6063 T4	2
5	Dome 6 Clip	1.4310 C1300	2
6	MK2	TPC/ 1.4301	4
alternative	MK2 Alu	Alu / TPC	4
7	Socket head bolt serrated - sim. ISO 4762 - M8x20	A2-70	4

K2 Systems GmbH
Haldenstr. 1
71272 Renningen
Germany
+49 7159 42059-0

Designation:
Data sheet
D-Dome 6.15 Base Set
Subassembly

	Name	Date	Material:		Item no.:	2004500	A3
Designed	M.Schuler	05.03.2024	see table				
Approved	S. Frey	29.07.2025	Surface: -		Drawing no.:	07-442-05	All dimensions in mm
Last change	M. Schuler	28.07.2025	Weight: ca. 3160.1 g/pc	Scale: 1:5			Sheet 1 of 1

This drawing is the sole property of K2 Systems GmbH. It is protected by copyright and may only be copied, reproduced or distributed to a third party with explicit permission!