

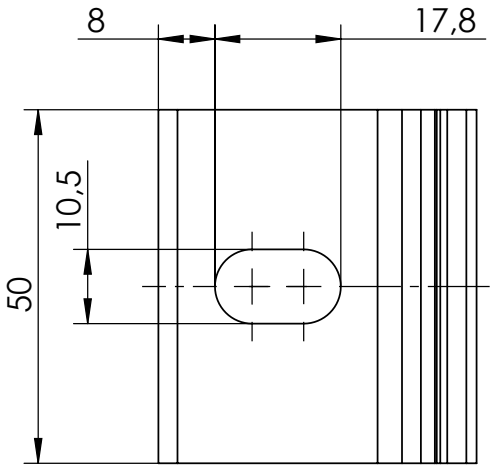

Isometric

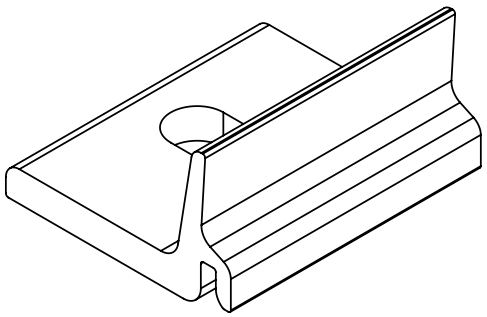

K2 Systems GmbH
Haldenstr. 1
71272 Renningen
Germany
+49 7159 42059-0

Designation:

Data sheet Climber 36/50 M10

	Name	Date	Material:	Item no.:	Revision:	A4
Designed	S. Frey	11.11.2025	EN AW 6063 T66	2003146	02	
Approved	A. Soumpalas	11.11.2025	Surface: mill finish			All dimensions in mm
Last change			Weight: ca. 43.4 g/pc	Scale: 1:1		Sheet 1 of 1

This drawing is the sole property of K2 Systems GmbH. It is protected by copyright and may only be copied, reproduced or distributed to a third party with explicit permission!