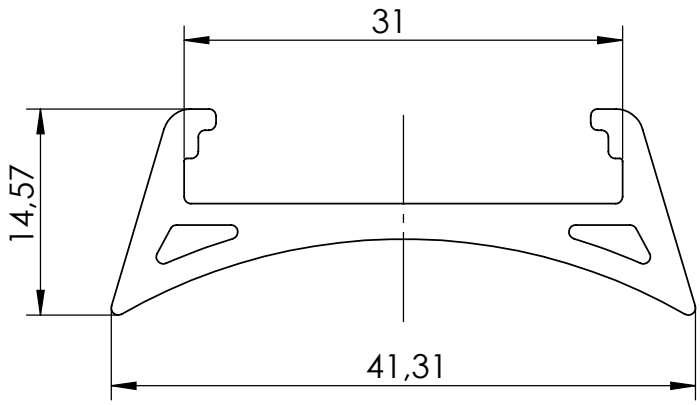

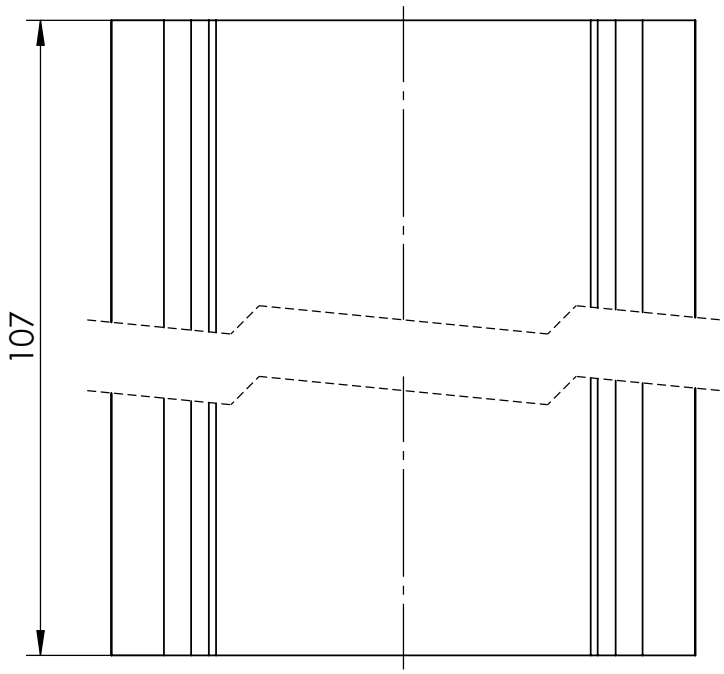

Isometrie
1 : 2

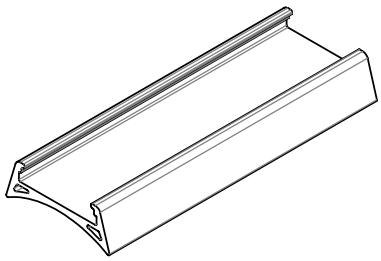

K2 Systems GmbH
Haldenstr. 1
71272 Renningen
Germany
+49 7159 42059-0

Designation:

Data sheet BasicClip CSM Adapter

	Name	Date	Material:		Item no.:	Revision:	A4
Designed	A. Soumpalas	16.10.2025	EPDM 45 Shore A black		2004912	01	
Approved	TOE	17.10.2025	Surface: -				All dimensions in mm
Last change	ASO	16.10.2025	Weight: ca. 23.34 g/pc	Scale: 2:1			Sheet 1 of 1

This drawing is the sole property of K2 Systems GmbH. It is protected by copyright and may only be copied, reproduced or distributed to a third party with explicit permission!