SILICON IRRADIANCE SENSOR

Measurement of Solar Irradiance

Silicon irradiance sensors (Si sensor) show a cost-effective, but rugged and reliable solution for the measurement of solar irradiance, especially for the monitoring of Photovoltaic (PV) systems. Based on the construction of the sensor element corresponding to a PV module they are ideal as reference for the monitoring of PV systems. Especially the spectral response comparable to PV modules as well as the similar inclination error (incident angle modifier) allow an exact analysis of PV energy yields using Si sensor data.

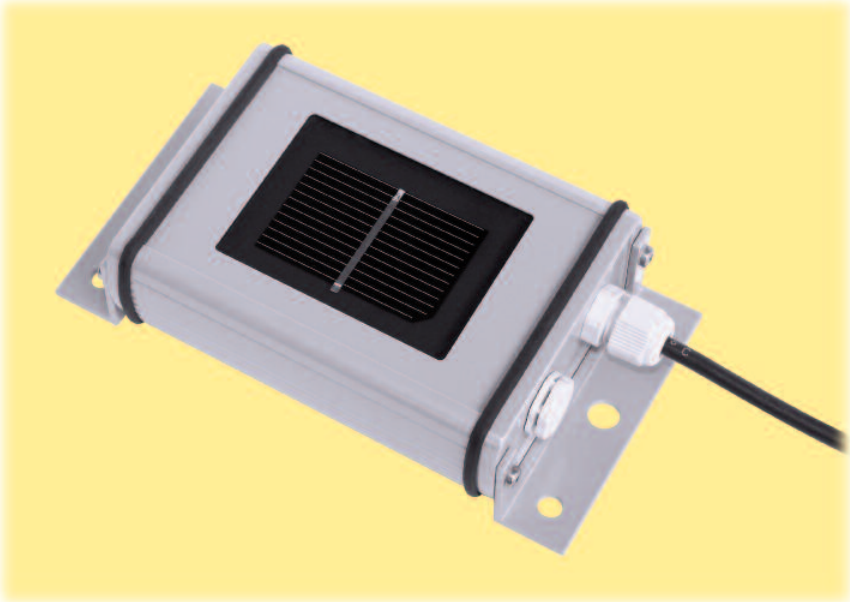

General Information

Mode of Operation

A silicon solar cell can be used as an irradiance sensor, because the short-circuit current is proportional to the irradiance. Our sensors are build out of a monocrystalline Si solar cell connected to a shunt. Due to the low resistance of the shunt the cell operates next to short-circuit.

To minimize influences of temperature to the measuring signal all of our sensors with the extension „TC“ have an active temperature compensation via a temperature sensor laminated to the back surface of the solar cell.

All sensors are calibrated in artificial sunlight against a reference cell calibrated at the Physikalisch-Technische Bundesanstalt (PTB, National Metrology Institute of Germany).

Mechanical Construction

The solar cell is embedded in Ethylen-Vinyl-Acetat (EVA) between glass and Tedlar. The laminated cell is integrated into a case of powder-coated aluminium. Therefore the sensor construction is comparable to that of a standard PV module. The electrical connection is realized by a 3 m cable or a waterproof (IP67) connector.

Optional Temperature Measurement

Additionally to the irradiance measurement our silicon sensors with the extension “-T” are able to measure the temperature of the solar cell using a temperature sensor laminated to the back of the cell. This solar cell temperature can approximately be used as module temperature.

INGENIEURBÜRO
Mencke & Tegtmeyer GmbH

Meßgeräte für die Solartechnik
Made in Germany

INGENIEURBÜRO
Mencke & Tegtmeyer GmbH

Schwarzer Weg 43A
31789 Hameln
Germany
Tel: +49 51 51 / 40 36 99 - 0
Fax: +49 51 51 / 40 36 99 - 19
email: info@ib-mut.de
http://www.ib-mut.de

SILICON IRRADIANCE SENSOR

Technical Data

SI-SENSOR
General Information

- Solar cell: Monocrystalline silicon (50 mm x 33 mm)
- Operating temperature: -35°C to 80°C
- Electrical connection: 3 m shielded cable
- Load impedance for Si-V-1.5TC-batt: minimal 1 MΩ
- Load impedance for Si-V-1.5TC and -TC-T, Si-V-10TC and -TC-T: min. 10 kΩ
- Load impedance for Si-I-420TC and -TC-T: minimal 20 Ω and maximal 400 Ω
- Case, protection mode: Powder-coated aluminium, IP 65
- Dimension, weight: 155 mm x 85 mm x 39 mm, approx. 350 to 470 g
- Customs number for all sensors: 85 41 40 90

Digital

- Protocol: M&T (type -MT), MODBUS RTU (type -MB)
- Interface: RS485 up to 38.4 kBaud
- Galvanic isolation: 1.000 V between power supply and bus

DIMENSIONS

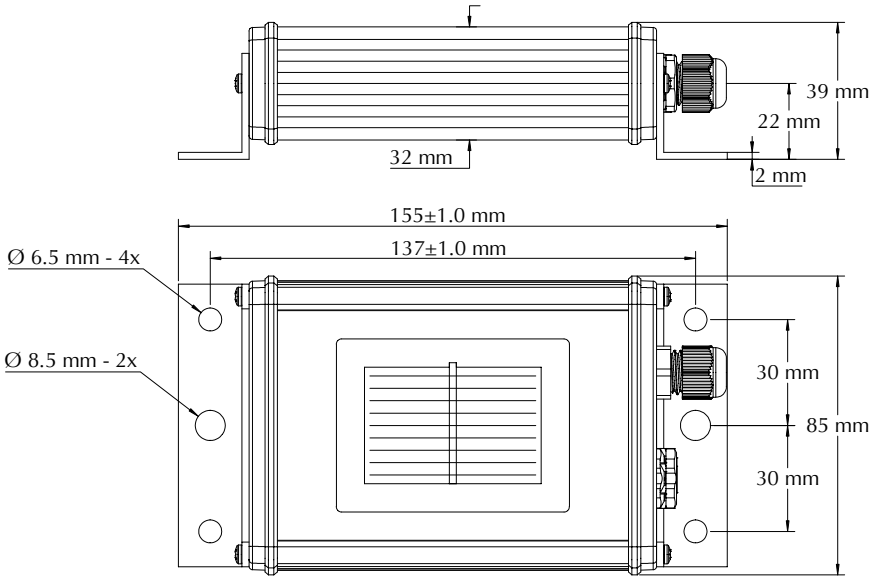

INCIDENT ANGLE MODIFIER

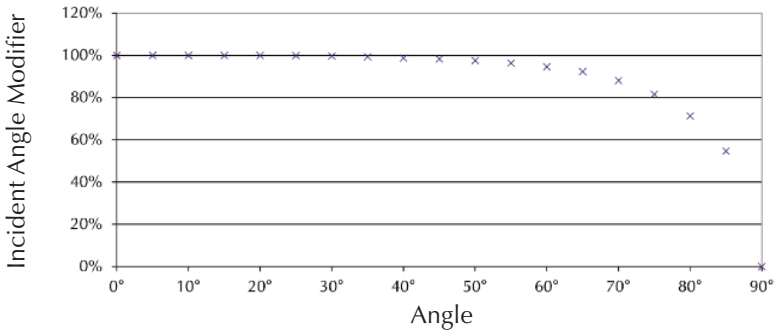

SPECTRAL RESPONSE

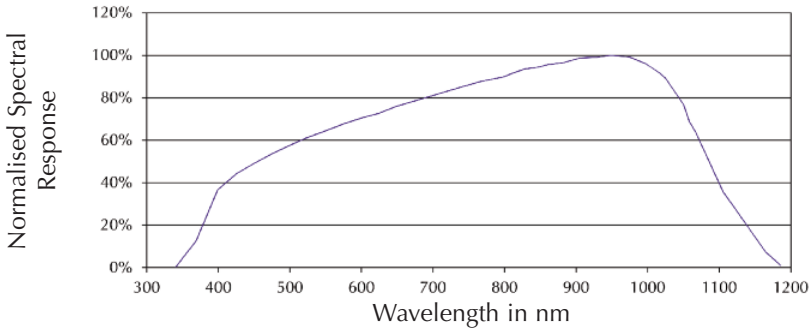

SILICON IRRADIANCE SENSOR

Technical Data

Sensor Types:

Type Measured Variable	Irradiance Power Supply Current Consumption	Irradiance Temperature compensation	Irradiance Output Signal	Cell Temperature Output Signal
Si-V-1.5TC-batt Irradiance	Internal Lithium Battery typic 15 µA	Yes	0 to 1.5 V for 0 to 1,500 W/m²	./.
Si-V-1.5TC Irradiance	24 V_{DC} (4 to 28 V_{DC}) typic < 1 mA	Yes	0 to 1.5 V for 0 to 1,500 W/m²	./.
Si-V-1.5TC-T Irradiance, Cell Temperature	24 V_{DC} (5.5 to 28 V_{DC}) typic < 1 mA	Yes	0 to 1.5 V for 0 to 1,500 W/m²	0 to 2 V for -40 to +90°C
Si-mV-85 Irradiance	./. ./.	No	approx. 85 mV for 1,500 W/m²	./.
Si-mV-85-Pt100(-4L) Irradiance, Cell Temperature	./. ./.	No	approx. 85 mV for 1,500 W/m²	Pt100
Si-mV-85-Pt1000(-4L) Irradiance, Cell Temperature	./. ./.	No	ca. 85 mV for 1,500 W/m²	Pt1000
Si-V-10TC Irradiance	24 V_{DC} (12 to 28 V_{DC}) typic < 1 mA	Yes	0 to 10 V for 0 to 1,500 W/m²	./.
Si-V-10TC-T Irradiance, Cell Temperature	24 V_{DC} (12 to 28 V_{DC}) typic <1 mA	Yes	0 to 10 V for 0 to 1,500 W/m²	0 to 10 V for -40 to +90°C
Si-I-420TC Irradiance	24 V_{DC} (12 to 28 V_{DC}) typic 5 to 23 mA	Yes	4 to 20 mA for 0 to 1,500 W/m²	./.
Si-I-420TC-T Irradiance, Cell Temperature	24 V_{DC} (12 to 28 V_{DC}) typic 10 to 46 mA	Yes	4 to 20 mA for 0 to 1,500 W/m²	4 to 20 mA for -40 to +90°C
Si-RS485TC-T Irradiance, Cell Temperature	24 V_{DC} (12 to 28 V_{DC}) typic 25 mA	Yes	M&T, MODBUS 0 to 1,500 W/m²	M&T, MODBUS -40 to +90°C
Si-RS485TC-2T Irradiance, Cell Temperature, Ambient Temperature (sensor firmly connected with 3 m cable)	24 V_{DC} (12 to 28 V_{DC}) typic 25 mA	Yes	M&T, MODBUS 0 to 1,500 W/m²	M&T, MODBUS -40 to +90°C
Si-RS485TC-T-Tm Irradiance, Cell Temperature, Module Temperature (sensor firmly connected with 3 m cable)	24 V_{DC} (12 to 28 V_{DC}) typic 25 mA	Yes	M&T, MODBUS 0 to 1,500 W/m²	M&T, MODBUS -40 to +90°C
Si-RS485TC-2T-v Irradiance, Cell Temperature Accessories: External Temperature, Wind Speed	24 V_{DC} (12 bis 28 V_{DC}) typic 25 mA	Yes	M&T, MODBUS 0 to 1,500 W/m²	M&T, MODBUS -40 to +90°C

ACCESSORIES FOR Si-RS485TC-2T-v

- **Tamb-Si**, Ambient temperature sensor in stainless steel sleeve with 3 m cable and connector (IP67), measuring range: -40 to +90°C
- **Tmodul-Si**, Module temperature sensor in aluminium block with 3 m cable and connector (IP67), measuring range: -40 to +90°C
- **Vwind-Si**, Wind speed sensor with 5 m cable and connector (IP67), measuring range: 0.9 to 40 m/s

SILICON IRRADIANCE SENSOR

Measurement Uncertainty of Irradiance
(does not apply for sensors with filter glass or polycrystalline cells)

Parameter	Sensor Type	Typical Measurement Uncertainty
Response time (99 %) for G > 50 W/m²	Si-mV-85(-Pt100/-Pt1000)	0.001 s
	Si-V-1.5TC(-T), Si-V-10TC(-T), Si-I-420TC(-T)	0.15 s
	Si-RS485TC-XX	1 s
Offset	Si-mV-85(-Pt100/-Pt1000)	0 W/m²
	Si-V-1.5TC(-T), Si-V-10TC(-T)	2 W/m²
	Si-I-420TC(-T)	2.2 W/m²
	Si-RS485TC-XX	1 W/m²
Stability per anno [1]	all	0.50 %
Non-Linearity [2]	all	0.10 %
Temperature Dependancy [2] for -35 to +80°C	Si-mV-85(-Pt100/-Pt1000) (with external temperature comp.) [3]	0.20 %
	Si-mV-85(-Pt100/-Pt1000) (without external temperature comp.)	3.00 %
	Si-V-1.5TC(-T), Si-V-10TC(-T), Si-I-420TC(-T)	0.40 %
	Si-RS485TC-XX	0.40 %
Factory-Calibration	all (repeatability against reference)	0.75 %
	all (measurement uncertainty of reference at STC and vertical light beam)	0.50 %
Measurement Uncertainty over all [4]	±5 W/m² ± 2.5 % of reading valid for temperature compensation, spectrum AM 1.5 and vertical light beam	

Sensor Type	Measurement Uncertainty of the internal Temperature Measurement Condition	Measurement Uncertainty
Si-mV-85(-Pt100/-Pt1000)	-35 to +80°C	IEC 60751, class A for version (-4L)
Si-V-1.5TC-T	-35 to +70°C / -35 to +80°C	1.0 K / 1.1 K
Si-V-10TC-T	-35 to +70°C / -35 to +80°C	1.0 K / 1.1 K
Si-I-420TC-T	-35 to +60°C / -35 to +80°C	1.0 K / 1.3 K
Si-RS485TC-XX	-35 to +80°C	1.0 K

[1] Percentage rate referred to the measurement range
[2] Percentage rate referred to the measurement value
[3] External temperature compensation must be calculated on data acquisition side (temperature coefficient at AM 1.5: 0.0005 1/K)
[4] Based on GUM (Guide to the Expression of Uncertainty in Measurement) with k=2, not valid for Si-mV-85 or Si-mV-85(-Pt100/-Pt1000) without external temperature compensation

EXTEND OF Supply
Options

- Silicon sensor with shielded cable, 0.14 mm², UV- and temperature resistant, 3m length and ferrules (except Si-V-1.5TC-batt)
- Calibration protocol and quick reference guide
- DaKKS calibration certificate
- Customized cable lengths
- Version with waterproof connector (Si-V-1.5TC-batt always with connector)
- Adaptation of spectral response to different PV materials
- Customised scaling or measuring range

T) Ingenieurbüro Mencke & Tegtmeyer GmbH · Hameln · © August 2018
Errors and technical changes reserved

SILICON IRRADIANCE SENSOR

Option Connector

ELECTRICAL CONNECTION

Optional Version with Connectors

The electrical connection of the Si sensor is realized with the inbuilt connector and the suitable plug.

Technical Data of the Plug

- Cable dimensions (best / max.): 0.14 mm² / 0.25 mm² (AWG26 / AWG24)
- Diameter of cable: 3.5 … 5 mm
- Protection mode: IP67 in conjunction with the suitable connector

The connection of the different Silicon irradiance sensors are listed in the following table. The pin numbers are printed at the inside of the plug. Please take care of the mounting of the plugs as shown at the end of this page. Only if these mounting steps are realised the plug meets IP67 when connected.

Type	Pin Numbers of the Plug			
	Pin 1	Pin 2	Pin 3	Pin 4
Si-V-1.5TC-batt	Plus Signal Irradiance	Minus Signal Irradiance	not available	not available
Si-V-1.5TC	Plus Signal Irradiance	Minus Signal* Irradiance	Plus Signal Power Supply	not available
Si-V-1.5TC-T	Plus Signal Temperature	Plus Signal Irradiance	Plus Signal Power Supply	Minus Signal* Irradiance
Si-mV-85	Plus Signal Irradiance	Minus Signal Irradiance	not available	not available
Si-mV-85-Pt100 Si-mV-85-Pt1000	Plus Signal Irradiance	Minus Signal Irradiance	Pt100 Pt1000	Pt100 Pt1000
Si-I-420TC	Plus Signal Irradiance	Minus Signal* Irradiance	Plus Signal Power Supply	not available
Si-I-420TC-T	Plus Signal Temperature	Plus Signal Irradiance	Plus Signal Power Supply	Minus Signal* Irradiance
Si-V-10TC	Plus Signal Irradiance	Minus Signal* Irradiance	Plus Signal Power Supply	
Si-V-10TC-T	Plus Signal Temperature	Plus Signal Irradiance	Plus Signal Power Supply	Minus Signal* Irradiance

* Minus signals of all sensors are identical to supply ground.

MOUNTING OF PLUG

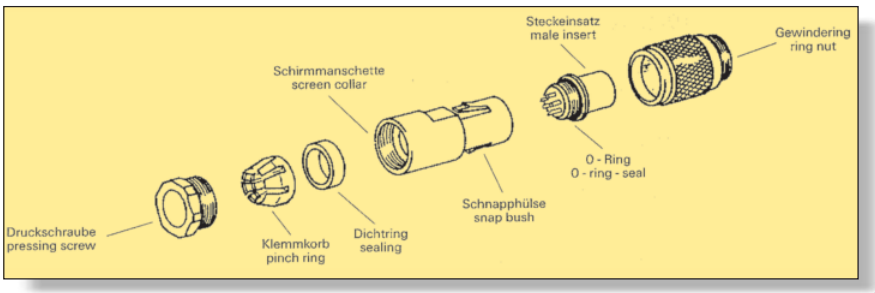

© Ingenieurbüro Mencke & Tegtmeyer GmbH · Hameln · © August 2018
Errors and technical changes reserved