Ta-Pt100 and Ta-Pt1000

Ambient Temperature Sensor with Platinum Resistance



Short Description

Our ambient temperature sensors come equipped with a stable aluminium housing and spring type clamps inside for cable connection. Thanks to the use of top quality components the sensors achieve very high accuracy and are ideal for use in industrial and field (PV module temperature) environments.
If required, the sensors can be ordered with an inspection certificate 3.1 as per DIN EN 10204.

Technical Data

Types	Ta-Pt100 / Ta-Pt1000
Sensor Element	Pt100 / Pt1000 Class A as per EN 60751
Sensor Housing	Stainless Steel Jacket, Diameter 6 mm, Length 23 mm
Case Material	Powder Coated Aluminium
Case Dimension / Protection Level	64 mm x 58 mm x 34 mm / IP 67
Weight	appr. 260 g
Operating Condition	-40 to +80 °C
Customs Number	90 25 19 20

Ta-Pt100 and Ta-Pt1000
Ambient Temperature Sensor

Safety Instructions
The installation and assembly of electrical equipment must be carried out by electrically qualified persons.

The sensor may not be used with equipment whose direct or indirect purpose is to prevent human death or injury, or whose operation poses a risk to humans, animals or property.

Electrical Connection
The cable shield shall be connected to the PE during installation. Displayed cable colours are only examples.

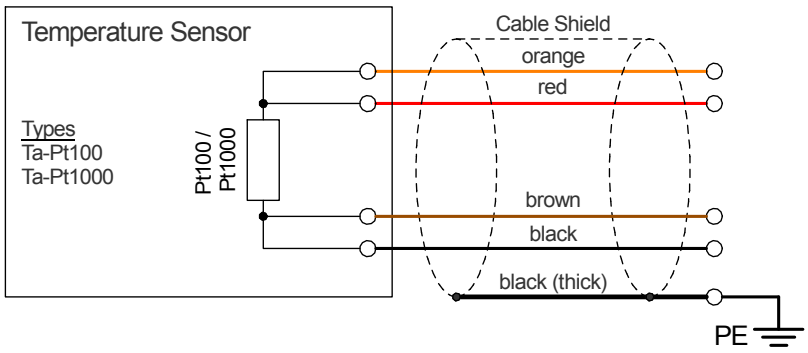

Installation Instructions
If mounted outdoors, avoid direct exposure to sunlight and rain (if necessary, provide protection from the sun and rain).

The through holes used to fix the sensor to a stable and suitable surface shall be accessible when the housing is opened.

The tightening torque of the case cover is 180 Ncm.

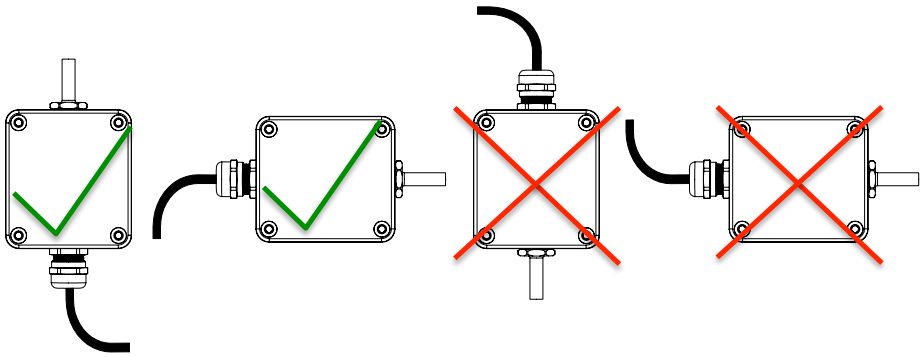

Maintanance
The sensors should be checked once a year for damage, contamination and correct fitting.

Drawing

