SUN2000-215KTL-H0
Smart String Inverter



- 9 MPP Trackers
- 99.0% Max. Efficiency
- String-level Management
- Smart I-V Curve Diagnosis Supported
- MBUS Supported
- Fuse Free Design
- Surge Arresters for DC & AC
- IP66 Protection

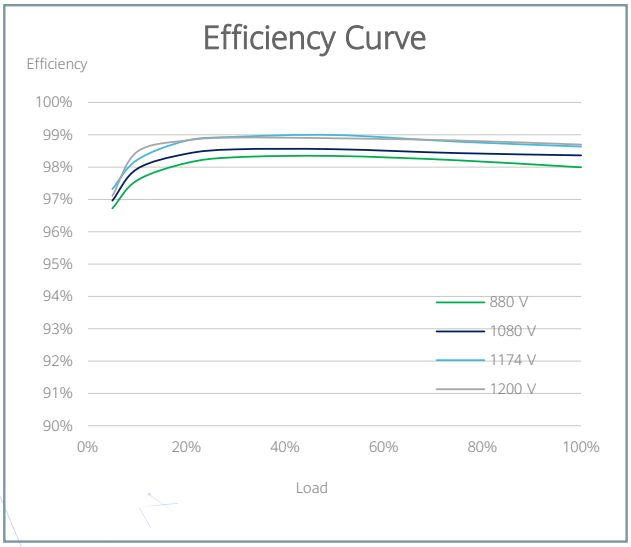

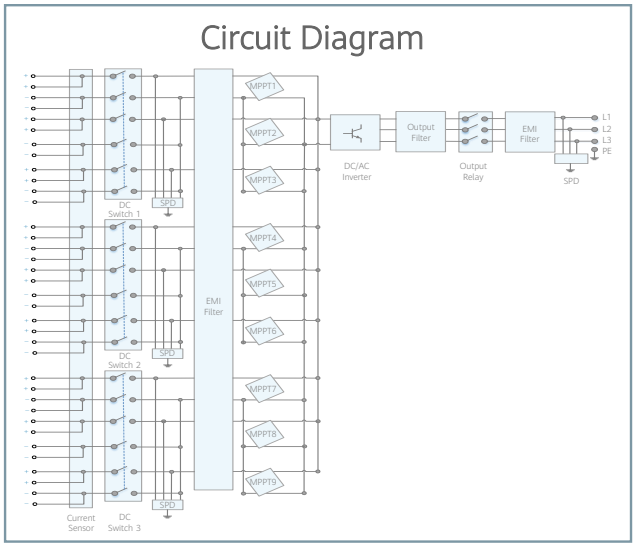

SUN2000-215KTL-H0

Technical Specifications

Efficiency	
Max. Efficiency	≥99.00%
European Efficiency	≥98.60%
Input	
Max. Input Voltage	1,500 V
Max. Current per MPPT	30 A
Max. Short Circuit Current per MPPT	50 A
Start Voltage	550 V
MPPT Operating Voltage Range	500 V ~ 1,500 V
Nominal Input Voltage	1,080 V
Number of Inputs	18
Number of MPP Trackers	9
Output	
Nominal AC Active Power	200,000 W
Max. AC Apparent Power	215,000 VA
Max. AC Active Power (cosϕ=1)	215,000 W
Nominal Output Voltage	800 V, 3W + PE
Rated AC Grid Frequency	50 Hz / 60 Hz
Nominal Output Current	144.4 A
Max. Output Current	155.2 A
Adjustable Power Factor Range	0.8 LG ... 0.8 LD
Max. Total Harmonic Distortion	< 1%
Protection	
Input-side Disconnection Device	Yes
Anti-islanding Protection	Yes
AC Overcurrent Protection	Yes
DC Reverse-polarity Protection	Yes
PV-array String Fault Monitoring	Yes
DC Surge Arrester	Type II
AC Surge Arrester	Type II
DC Insulation Resistance Detection	Yes
Residual Current Monitoring Unit	Yes
Communication	
Display	LED Indicators, WLAN + APP
USB	Yes
MBUS	Yes
RS485	Yes
General	
Dimensions (W x H x D)	1,035 x 700 x 365 mm (40.7 x 27.6 x 14.4 inch)
Weight (with mounting plate)	≤86 kg (189.6 lb.)
Operating Temperature Range	-25°C ~ 60°C (-13°F ~ 140°F)
Cooling Method	Smart Air Cooling
Max. Operating Altitude without Derating	4,000 m (13,123 ft.)
Relative Humidity	0 ~ 100%
DC Connector	Staubli MC4 EVO2
AC Connector	Waterproof Connector + OT/DT Terminal
Protection Degree	IP66
Topology	Transformerless