DATA SHEET

ITEM NO. 10019361

Mains switch box

Power Backup Dual EU

enwitec greenLink Group
Scherrwies 2 | 84329 Wurmannsquick
info@enwitec.eu

Designation	Mains switch box - all-pole - standard
Application	Compatible with all off-grid battery and hybrid inverters with two three-phase AC connections up to 30 KW
Region	EU
Mains disconnection	All-pole disconnection
Net shape	3PH 230/400V - TN-C/TN-S or TT networks; NO TN-C network in the customer system!
Inverter	only suitable for inverters with their own backup output
Control & monitoring	integrated current and voltage relay (without integrated smart meter)

All values in [mm]
Dimensions "blue"
Fastening points "orange"

Minimum distances

above	200
below	200
lateral	100
front	800

Internal arrangement and components may differ depending on the variant!

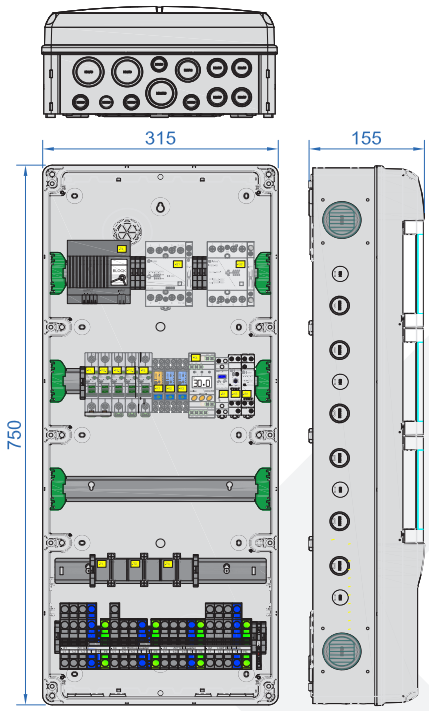

For other languages please scan the QR code!

SCOPE OF DELIVERY

Quantity	Designation
1	Mains switch box
1	Installation instructions
3	M40 cable gland incl. locknut
4	M32 cable gland incl. locknut
1	M20 cable gland incl. lock nut

Quantity	Designation
1	Dangerous voltage" warning sticker
1	Sticker - reference to a storage system with islanding capability
1	Operating instructions Selec current monitoring relay

10019361_datasheet_Power Backup Dual EU_5.0_EN_2025_05_20

©enwitec electronic GmbH

Status: May 2025
The text and illustrations correspond to the technical status at the time of printing and are subject to change without notice.
Despite careful editing, all information is provided without guarantee. Liability is excluded.

DATA SHEET

ITEM NO. 10019361

Mains switch box

Power Backup Dual EU

enwitec greenLink Group
Scherrwies 2 | 84329 Wurmannsquick
info@enwitec.eu

INTERNAL WIRING

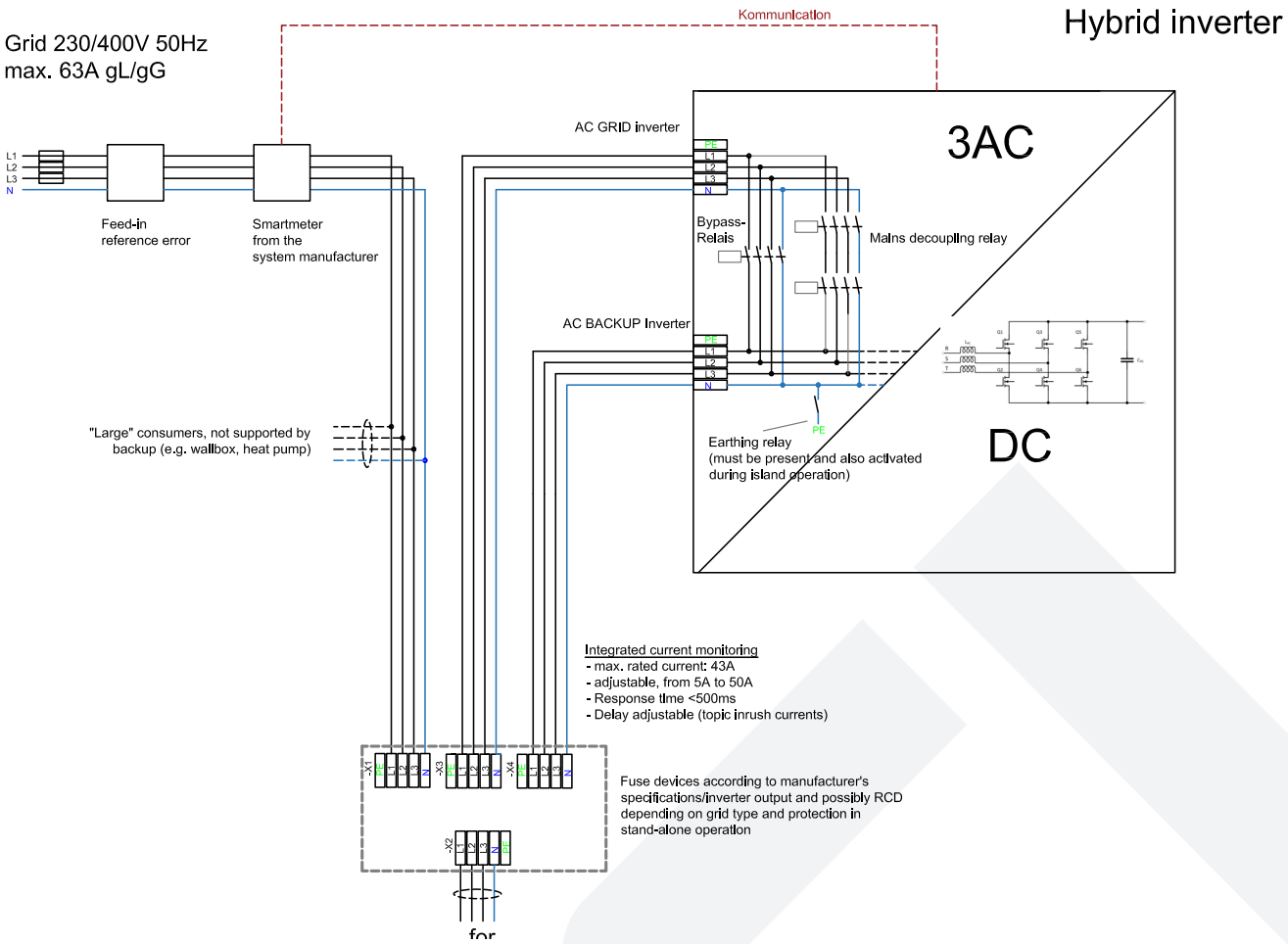

©enwitec electronic GmbH

Status: May 2025

The text and illustrations correspond to the technical status at the time of printing and are subject to change without notice.
Despite careful editing, all information is provided without guarantee. Liability is excluded.

DATA SHEET

ITEM NO. 10019361

Mains switch box

Power Backup Dual EU

enwitec greenLink Group
Scherrwies 2 | 84329 Wurmannsquick
info@enwitec.eu

CABLE ENTRY AND CONNECTIONS

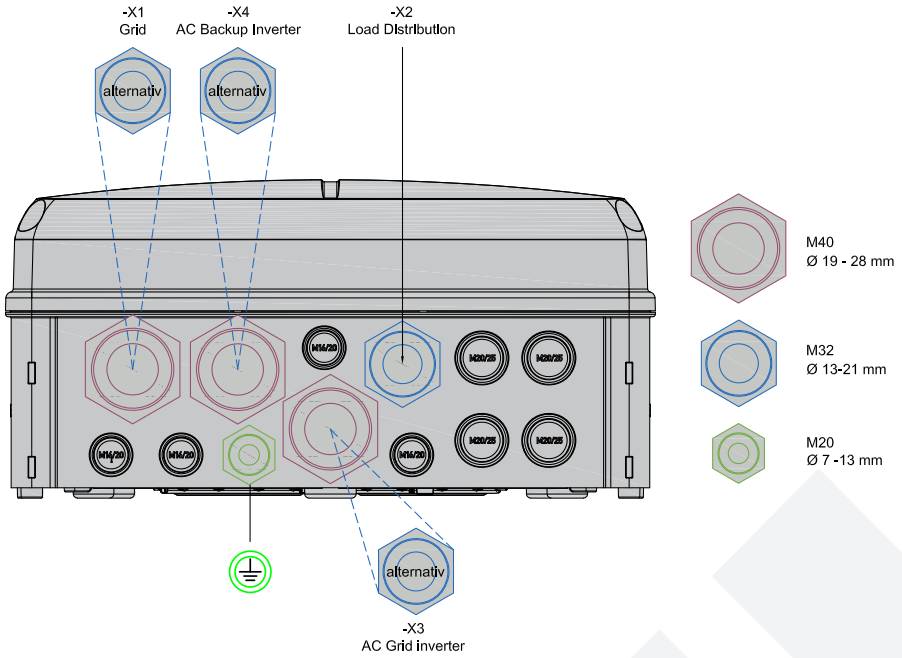

Cable gland	Terminal strip	Clamping range [mm]	Strand type Copper	max. cross-section [mm²]	Stripping length [mm]
M32 M40	-X1 - AC Grid	19 - 28	solid finely stranded finely stranded with ferrule	16 25 16	18 - 20
M32 M40	-X3 - AC Grid Inverter	19 - 28	solid finely stranded finely stranded with ferrule	16 25 16	18 - 20
M32 M40	-X4 - AC backup inverter	19 - 28	solid finely stranded finely stranded with ferrule	16 25 16	18 - 20
M32	-X2 - Load Distribution	13 - 21	solid finely stranded finely stranded with ferrule	16 25 16	18 - 20
M20	PE - potential equalisation	7 - 13	solid finely stranded finely stranded with ferrule	16 25 16	18 - 20

10019361_datasheet_Power Backup Dual EU_5.0_EN_2025_05_20

Status: May 2025
The text and illustrations correspond to the technical status at the time of printing and are subject to change without notice.
Despite careful editing, all information is provided without guarantee. Liability is excluded.
www.enwitec.eu
©enwitec electronic GmbH

DATA SHEET

ITEM NO. 10019361

Mains switch box

Power Backup Dual EU

enwitec
greenLink Group
Scherrwies 2 | 84329 Wurmannsquick
info@enwitec.eu

TORQUES

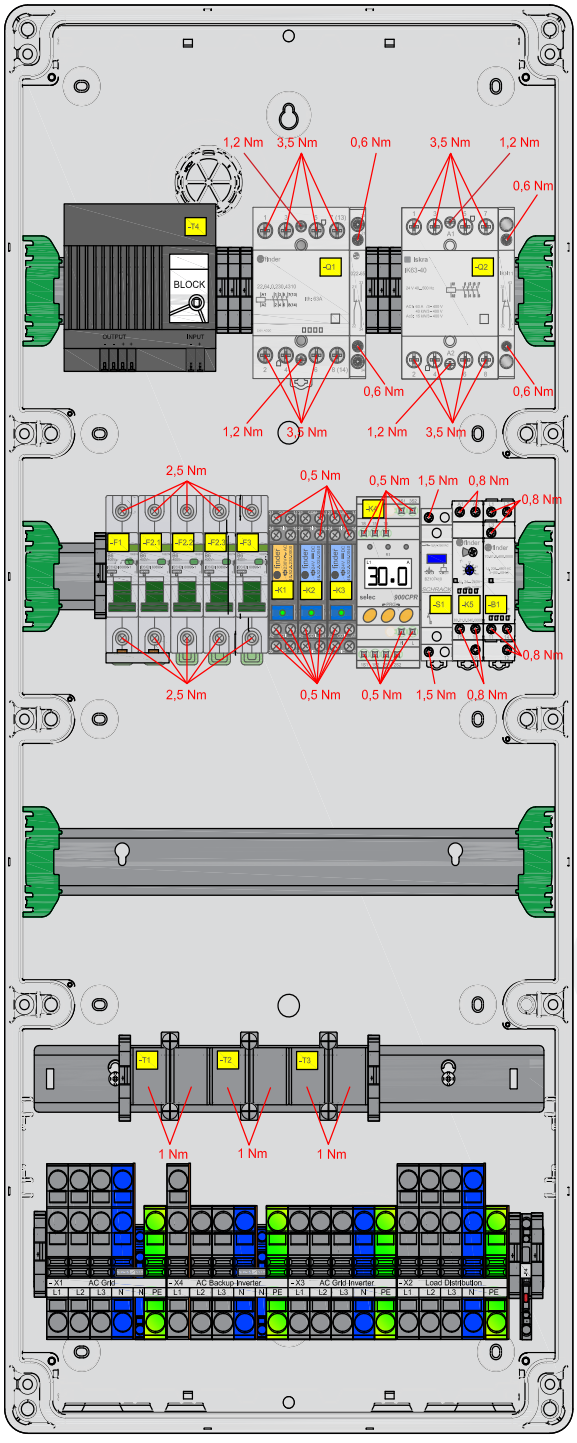

Status: May 2025

The text and illustrations correspond to the technical status at the time of printing and are subject to change without notice.
Despite careful editing, all information is provided without guarantee. Liability is excluded.

www.enwitec.eu

©enwitec electronic GmbH

DATA SHEET

ITEM NO. 10019361

Mains switch box

Power Backup Dual EU

enwitec greenLink Group
Scherrwies 2 | 84329 Wurmannsquick
info@enwitec.eu

TECHNICAL DATA

NOMINAL VALUES		• applicable / - not applicable
Rated voltage	[V]	3PH - 230/400
Rated insulation voltage	[V]	400
Operating frequency	[Hz]	50/60 +/- 5%
Max. prospective* short-circuit current	[nA]	10
Permitted net shape		TN-C/S/TT/TN-S
Mains disconnection		all-pole
Max. mains-side back-up fuse	[A]	63
Max. thermal throughput	[kW]	30
Standby losses, approx.	[W]	18

CIRCUIT BREAKERS AND RESIDUAL CURRENT CIRCUIT BREAKERS			
-F1/ -F2.1/ -F2.2/-F2.3	Mains" control circuit	[A]	B6
-F3	Backup" control circuit	[A]	B6
-F4	Miniature fuse 5 x 20	[A]	0.08 - inert

CONTACTORS (IEC/EN 61095; IEC/EN60947-1; IEC 60947-5-1)			
-K1	Control voltage	[V]	230
-K2/-K3	Control voltage	[V]	24
-K4	Current protection relay	[V]	230
-K5	Time relay	[V]	24
-B1	Voltage monitoring relay	[V]	230
-Q1	Grid feed-in	AC1[A]	63
-Q2	Feed-in inverter backup	AC1[A]	63

PUFFER NETWORK PART		
Type		Block B2302022
Power supply unit (buffered)	[VDC]	24

* is the maximum, unaffected continuous short-circuit current of the mains connection.

Status: May 2025

The text and illustrations correspond to the technical status at the time of printing and are subject to change without notice.
Despite careful editing, all information is provided without guarantee. Liability is excluded.

DATA SHEET

ITEM NO. 10019361

Mains switch box

Power Backup Dual EU

enwitec greenLink Group
Scherrwies 2 | 84329 Wurmannsquick
info@enwitec.eu

TECHNICAL DATA

GENERAL		• applicable / - not applicable
Dimensions WxHxD (without screw connections)	[mm]	315 x 750 x 155
Weight, approx.	[kg]	11
Operating temperature range at 25 kW at 30 kW	[°C]	-5...+35 max. 25
Temperature - transport/storage (24 hours 70°C)	[°C]	-25...+55
Humidity - condensing permitted		-
Humidity - permissible range	[%]	5...60
Degree of soiling		2
max. installation height above N.N.	[m]	2000
Protection class IP (EN 60529)		30
Outdoor suitability (protected area)		-
Installation type		Indoor area
Protection class (EN 61140)		II
Housing material		Polycarbonate
RoHS-compliant (2011/65/EU)		•
Housing colour		similar to RAL 7035
Lid		transparent
Mounting type		Wall mounting
Closure type		without tools

OTHER	
Customs tariff number	85371098

10019361_datasheet_Power Backup Dual EU_5.0_EN_2025_05_20

©enwitec electronic GmbH

Status: May 2025

The text and illustrations correspond to the technical status at the time of printing and are subject to change without notice.
Despite careful editing, all information is provided without guarantee. Liability is excluded.

www.enwitec.eu