DATA SHEET

1PH-Battery Backup-Distribution for 1 x Sunny Boy Storage

enwitec-order-number	**10013993_V1.1**
Designation	exclusively for the **FR/BE/NL/ES/PT** market **Single-Phase mains connection**
Matchcode	***1PH**_SMA_1ST6_V_X_BBDAP_12KW_1PH_PREP_ROEW_1.1*
Application	for SMA "Sunny Boy Storage 3.7/5.0/6.0"
Battery-Inverter	• 1 x Sunny Boy Storage - alternative use of 3.7/5.0/6.0
Monitoring & Control	• integrated SMA - Backup-Controller • prepared for retrofitting of either SMA Home Manager 2.0 or SMA Energy Meter
Grid structure	**Single Phase - 1PH 230V (230/N) - TT or TN-S System** **Not any TN-C System in the load circuits permitted!**

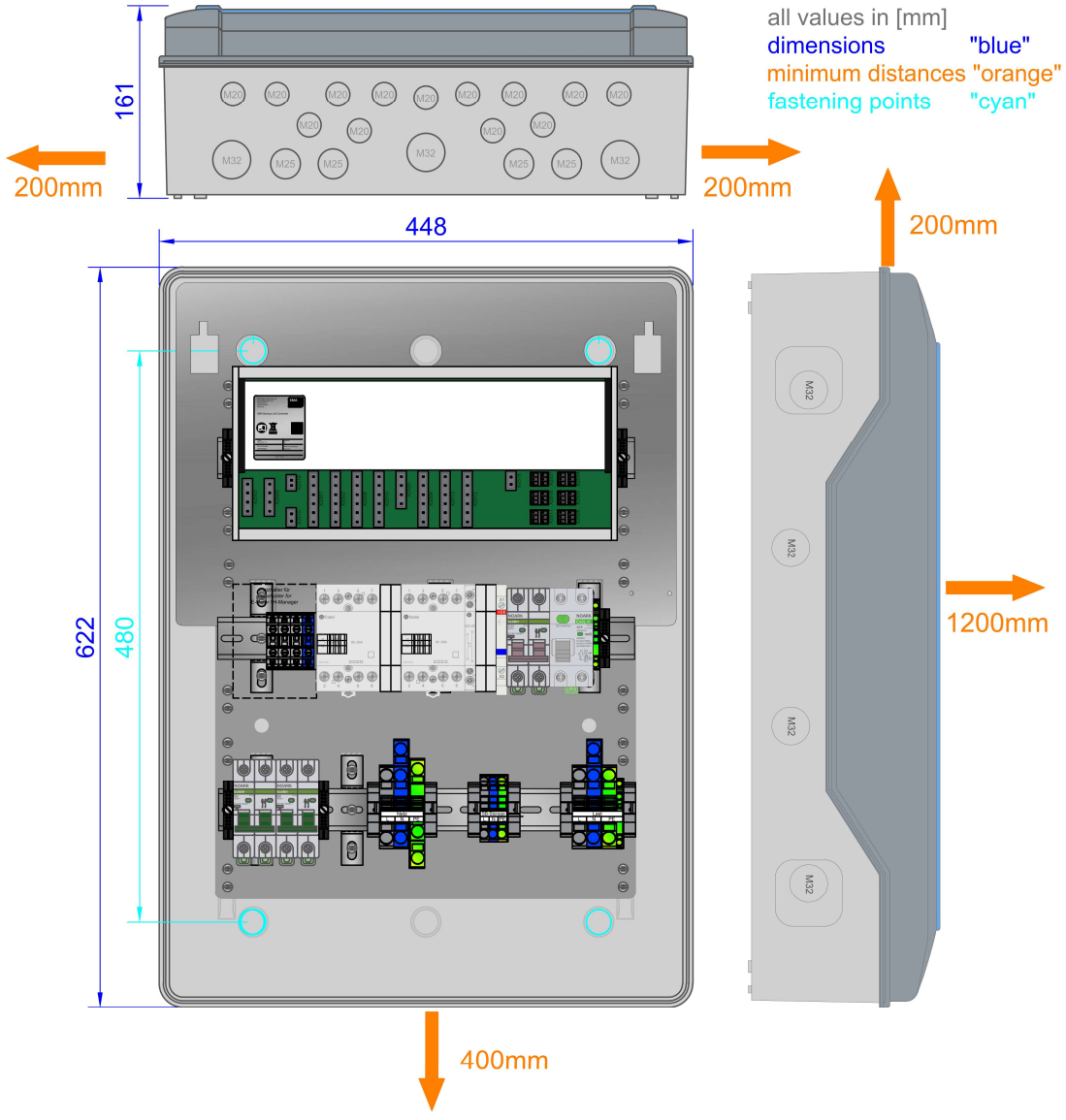

DATA SHEET

1PH-Battery Backup-Distribution for 1 x Sunny Boy Storage

Circuitry overview of the system

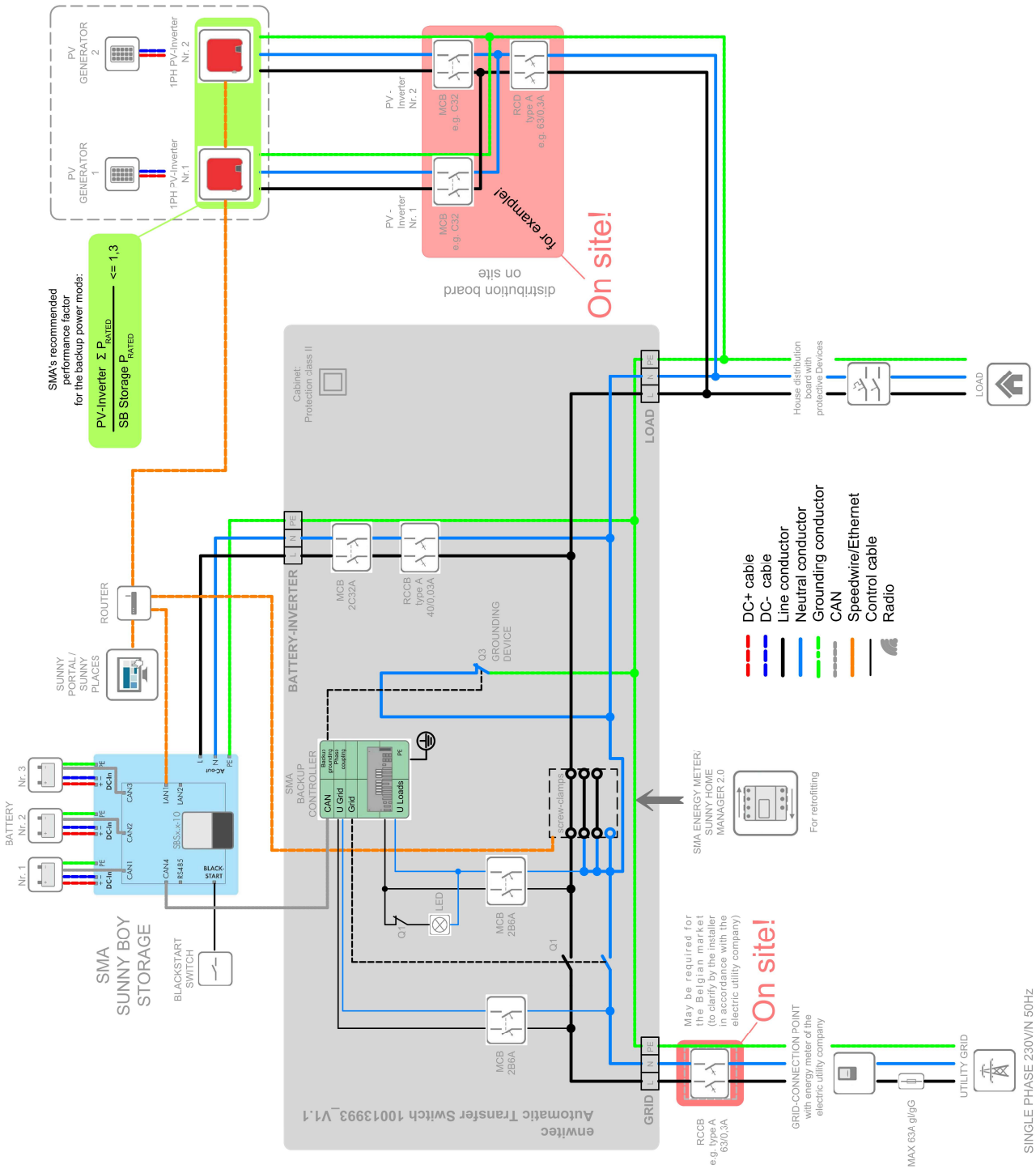

DATA SHEET

1PH-Battery Backup-Distribution for 1 x Sunny Boy Storage

Combination options - PV inverters

PV Inverters have to be connected in a distribution box which is to be installed on the part of the building site (see also "Schematic").

For stable backup power mode, the ratio of the Sunny Boy Storage to the installed PV inverter power must be observed!

SMA recommends a ratio, or a design factor, of approx. **1 : 1.3**

$$\frac{\Sigma \text{Rated power PV-inverter [kVA]}}{\text{Rated power SB-Storage [kVA]}} \leq 1.3$$

This ratio can also be higher. The following influencing factors play a role here:

- local yield situation/PV irradiation or weather (installed PV inverter power does not always match PV output power)
- limited active power setting by country specification at the PV inverter (e.g. like the 4,6 KVA limitation according to VDE-AR-N 4105)
- Battery charging state (if the battery is full, it can absorb less excess PV energy)
- Behaviour of the connected load loads (large load changes can affect the backup current stability)

For example, it is also possible to use one Sunny Boy 5.0 on a Sunny Boy Storage SBS 3.7 or two Sunny Boy 5.0 on one SBS 5.0 in the backup power system. However, brief interruptions in the backup power system can occur in the case of large load jumps.

DATA SHEET

1PH-Battery Backup-Distribution for 1 x Sunny Boy Storage

TECHNICAL DATA

RATINGS		
Rated operating voltage 1PH (230/**N**)	[V]	230
Rated insulation voltage	[V]	400
Operating frequency	[Hz]	50
Max. prospective short circuit current	[kA]	10
Permitted grid structure		TT/TN-S
Max. value of pre-fuses gL/gG	[A]	63
Max. thermal power	[kW]	12
Standby-losses approximately	[W]	10

CIRCUIT BREAKERS		
F1	Backup-Controller	2B6A
F2	Backup-Controller	2B6A
F201.1	SB-Storage	2C32A

RESIDUAL CURRENT BREAKER type "A"		
F201.2	SB-Storage	30mA

CONTACTORS IEC/EN61095; IEC/EN 60947-1; IEC 60947-5-1		
Q1 "Grid disconnection"	AC1/AC3 [A]	63/30
Q3 "Grounding device"	AC1/AC3 A]	63/30
Control voltage	AC/DC [V]	230
Hum-free		yes

CONNECTION/TERMINALS - max, cross section (Cu)		
X200	Grid [mm^2]	16(25)
X206	Load [mm^2]	16(25)
X201	SB-Storage [mm^2]	6(10)
X2504	communication cable acc. SMA's specification	

CABLE GLANDS AND TERMINAL RANGE [mm]		
X200/X206	M32/alternative M40	13-21/16-28
PE	M20	6-13
X201	M25	9-17
X2504	M20	6-13
E-Meter/ Home Manager	M25	split seal inserted for RJ45 connector

• = met
- = not met

GENERAL		
Width	[mm]	448
Height	[mm]	622
Depth	[mm]	161
Weight approximately	[kG]	12
Operating temperature range	[°C]	-25…+35
Temperature - transport/storage	[°C]	-25…+55
Temporary max. 24 hours	[°C]	+70°C
Humidity - condensing allowed	•/-	-
Humidity - permitted range	[%]	5…95
Max. altitude above sea level	[m]	2000
Protection class IP	(EN 60529)	65
Outdoor-application permitted	•/-	-
Installation type	(Indoor/Outdoor)	Indoor
Protection against electric shock	(EN61140)	II
Cabinet material		PC
RoHS-conformity	(2011/65/EU)	•
Colour of cabinet RAL (similar)		7035
Way of mounting		Wall
Cover		transparent
Locking system		tool-free

EN - STANDARDS		
Switching devices	EN 61439-1/EN 61439-2	•
Distribution boards - operated by ordinary people (DBO)	EN 61439-3	•

BACKUP POWER SYSTEM		
Max. overload currents (effective value)	[A]	
Sunny Boy Storage SBS3.7-10		20
Sunny Boy Storage SBS5.0-10		28
Sunny Boy Storage SBS6.0-10		32
Max. Output - fault current (<200µs)	[A]	198
Voltage to ground during preparedness of short circuit current	[V]	<20
Temporary current carrying - Island Grid grounding for 5 seconds	[A]	240
Continuously current carrying - Island Grid grounding	[A]	63
Switch-off time - starting at the point of exceeding the overload current	[ms]	80
Switch-off time - starting at the point of exceeding the current of 55A Peak (= short circuit)	[µs]	250

MISCELLANEOUS	
Customer tariff number	85371098