# DATA SHEET

enwitec electronic GmbH
Scherrwies 2 | 84329 Wurmannsquick
Mail info@enwitec.eu
www.enwitec.eu

## Art.Nr. 10012569

BATTERY-BACKUP-DISTRIBUTION | 3PH_SMA.SI_BBDAP_35KW_3PH_PREP_DACH

| | |
|---|---|
| Type designation | Battery-Backup-Distribution 3PH prepared for retrofitting SMA-Energy Meter/Home Manager 2.0 |
| Application | Battery-Backup Function - SMA „Flexible Storage System“ |
| Region | Germany, Switzerland |
| Battery-inverter | Sunny Island 4.4M-12 / -13 from firmware-version 1.00.xx.R<br>Sunny Island 6.0H-12 / -13 from firmware-version 1.00.xx.R<br>Sunny Island 8.0H-12 / -13 from firmware-version 1.00.xx.R<br>TT or TN-S system<br>Sunny Island feed in: 3 phase (=1 Cluster) |

All values in [mm]
Dimensions „blue“
Fastening points „orange“

Inner construction as well as choice of components may differ within the variants!

Minimum distances

| | |
|---|---|
| top | 200 |
| bottom | 400 |
| lateral | 200 |
| front | 1200 |

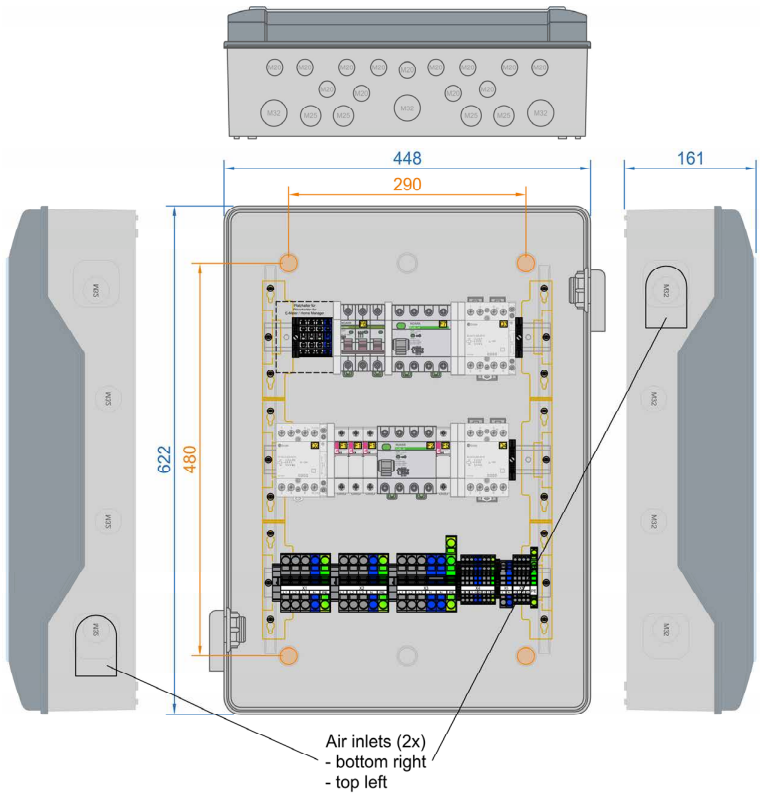


## SCOPE OF DELIVERY

| Quantity | Designation | Quantity | Designation |
|---|---|---|---|
| 1 | Installation instructions standard SMA-Sunny Island | 4 | Locknut M25 |
| 1 | Set cover caps for fastening screws | 7 | Locknut M20 |
| 2 | Cable gland M40 | 2 | Enlargement adaptor M32/M40 |
| 5 | Cable gland M32 | 2 | Enlargement adaptor M25/M32 |
| 2 | Cable gland M25 | 1 | Special sealing insert M25 |
| 7 | Cable gland M20 | 1 | Ferrule-fuse 10x38mm |
| 3 | Locknut M32 | | |

Status: May 2024

10012569_datasheet_3PH_SMA.SI_BBDAP_35KW_3PH_PREP_DACH_2024_05_07

The text and illustrations correspond to the technical status at the time of printing, subject to change without notice. Despite carefus editing, all information is without guarantee. Liability is excluded. ©enwitec electronic GmbH

# DATA SHEET

enwitec electronic GmbH
Scherrwies 2 | 84329 Wurmannsquick
Mail info@enwitec.eu
www.enwitec.eu

Art.Nr. 10012569

BATTERY-BACKUP-DISTRIBUTION | 3PH_SMA.SI_BBDAP_35KW_3PH_PREP_DACH

## ORIGINAL CIRCUIT DIAGRAM SMA

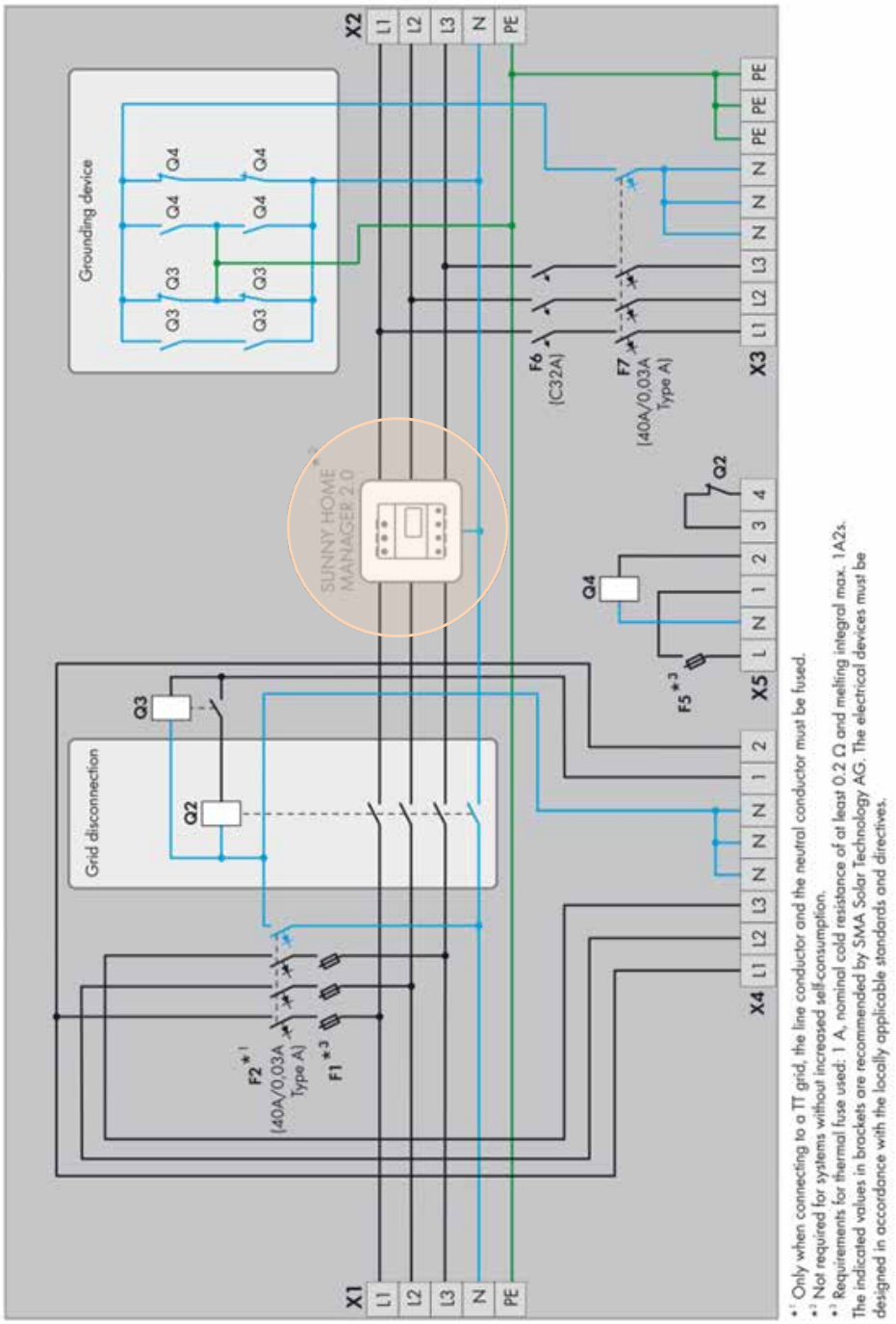


10012569: prepared for retrofitting SMA Energy Meter/Home Manager 2.0



The text and illustrations correspond to the technical status at the time of printing, subject to change without notice. Despite carefus editing, all information is without guarantee. Liability is excluded. ©enwitec electronic GmbH

# DATA SHEET

enwitec electronic GmbH
Scherrwies 2 | 84329 Wurmannsquick
Mail info@enwitec.eu
www.enwitec.eu

Art.Nr. 10012569

BATTERY-BACKUP-DISTRIBUTION | 3PH_SMA.SI_BBDAP_35KW_3PH_PREP_DACH

## ORIGINAL CIRCUITRY OVERVIEW SMA

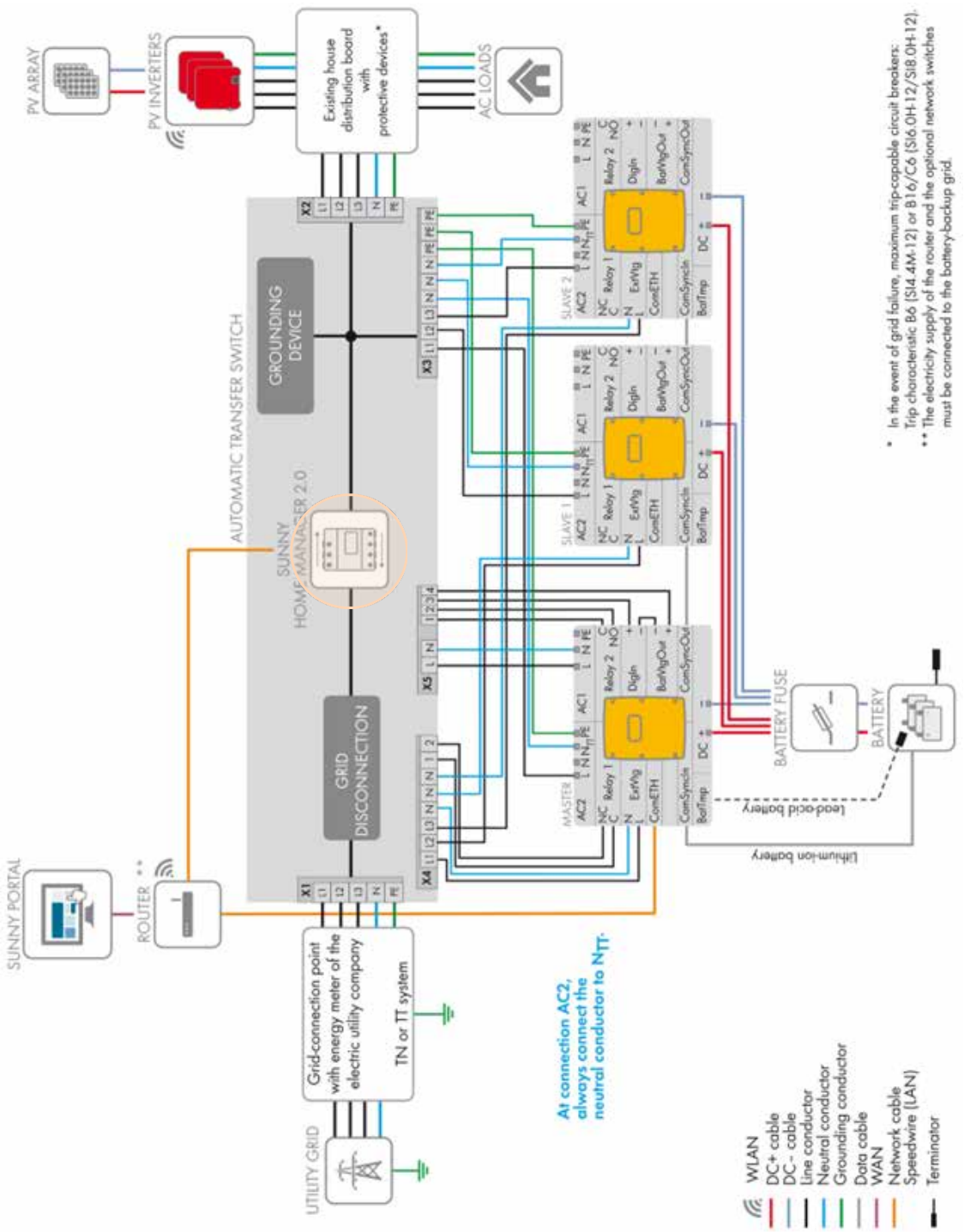


10012569: prepared for retrofitting SMA Energy Meter/Home Manager 2.0



The text and illustrations correspond to the technical status at the time of printing, subject to change without notice. Despite carefus editing, all information is without guarantee. Liability is excluded. ©enwitec electronic GmbH

# DATA SHEET

enwitec electronic GmbH
Scherrwies 2 | 84329 Wurmannsquick
Mail info@enwitec.eu
www.enwitec.eu

Art.Nr. 10012569

BATTERY-BACKUP-DISTRIBUTION | 3PH_SMA.SI_BBDAP_35KW_3PH_PREP_DACH

## CABLE ENTRY

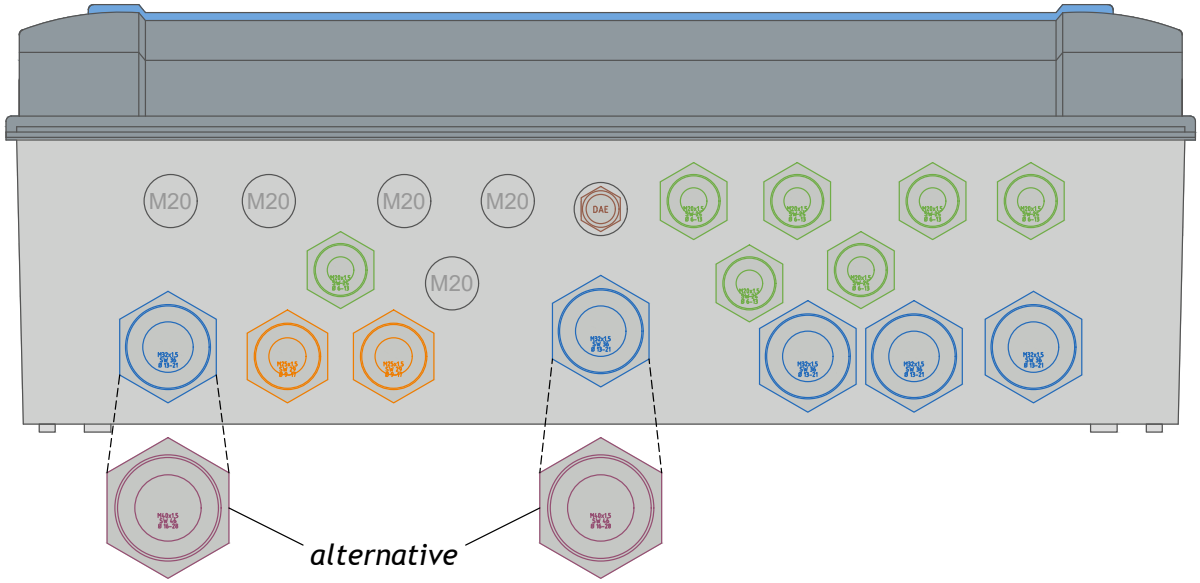


| Terminal block | Size (metrical | Clamping range [mm] | Wire type | Cross section [mm²] | Stripping length [mm] | Ferrule |
|---|---|---|---|---|---|---|
| X1, X2 | M32/M40 | 13 - 21/16 - 28 | solid<br>stranded<br>stranded | 16<br>25<br>16 | 18 - 20 | -<br>-<br>✓ |
| X1 - PE | M20 | 6 - 13 | solid<br>stranded<br>stranded | 2,5<br>2,5<br>2,5 | 8 - 9 | -<br>-<br>✓ |
| X3 | M32 | 13 - 21 | solid<br>stranded<br>stranded | 16<br>25<br>16 | 18 - 20 | -<br>-<br>✓ |
| X4 | M20 | 6 - 13 | solid<br>stranded<br>stranded | 2,5<br>2,5<br>2,5 | 8 -9 | -<br>-<br>✓ |
| X5 (L1/N/PE) | M25 | 9 - 17 | solid<br>stranded<br>stranded | 10<br>10<br>6 | 13 - 15 | -<br>-<br>✓ |
| X5 (1/2/3/4) | M20 | 6 - 13 | solid<br>stranded<br>stranded | 2,5<br>2,5<br>2,5 | 8 - 9 | -<br>-<br>✓ |



The text and illustrations correspond to the technical status at the time of printing, subject to change without notice. Despite carefus editing, all information is without guarantee. Liability is excluded. ©enwitec electronic GmbH

# DATA SHEET

Art.Nr. 10012569

BATTERY-BACKUP-DISTRIBUTION | 3PH_SMA.SI_BBDAP_35KW_3PH_PREP_DACH

enwitec electronic GmbH
Scherrwies 2 | 84329 Wurmannsquick
Mail info@enwitec.eu
www.enwitec.eu

## GENERAL DATA

| NOMINAL VALUES (Grid connection) | | • applicable / - not applicable |
|---|---|---|
| Rated insulation voltage AC | [V] | 3PH - 230/400 |
| Rated operating voltage | [V] | 400 |
| Operating frequency | [Hz] | 50/60+/-5% |
| Max. prospective short circuit current | [kA] | 10 |
| Permitted grid structure | | TT/TN-S |
| Max. value of pre-fuses | [A] | 63 |
| Max. thermal power | [kW] | 35 |
| Standby-loss, ca. | [W] | 15 |

| CIRCUIT BREAKERS AND FUSES | | | |
|---|---|---|---|
| F1 | Ferrule-fuse 10x38mm | [A] | 1 - fast |
| F2 | RCD (residual current protective device) | [A] | Typ A / 40 - 0,03 |
| F5 | Ferrule-fuse 10x38mm | [A] | 1 - fast |
| F6 | MCB (circuit breaker) | [A] | C32 |
| F7 | RCD (residual current protective device) | [A] | Typ A / 40 - 0,03 |

| CONTACTORS (IEC/EN 61095; IEC/EN60947-1; IEC 60947-5-1) | | | |
|---|---|---|---|
| Q2 | Grid disconnection | AC1 [A] | 63 |
| Q3 | Grounding device I | AC1 [A] | 40 |
| Q4 | Grounding device II | AC1 [A] | 40 |
| Control voltage | | [V] | 230 |
| Hum-free | | •/- | • |



The text and illustrations correspond to the technical status at the time of printing, subject to change without notice. Despite carefus editing, all information is without guarantee. Liability is excluded. ©enwitec electronic GmbH

# DATA SHEET

enwitec electronic
enwitec electronic GmbH
Scherrwies 2 | 84329 Wurmannsquick
Mail info@enwitec.eu
www.enwitec.eu

Art.Nr. 10012569

BATTERY-BACKUP-DISTRIBUTION | 3PH_SMA.SI_BBDAP_35KW_3PH_PREP_DACH

## TECNICAL DATA

| GENERAL DATA | | • applicable / - not applicable |
|---|---|---|
| Dimensions WxHxD (without pedestal) | [mm] | 448 x 622 x 161 |
| Weight, ca. | [kg] | 13,5 |
| Operating temperature range | [°C] | -25...+40 |
| Temperature - transport/storage (24 h. 70°C) | [°C] | -25...+55 |
| Humidity - condensing allowed | •/- | - |
| Humidity - permitted range | [%] | 5...70 |
| Max. altitude above sea level N.N. | [m] | 2000 |
| Protection class IP (EN 60529) | | 44 |
| outdoor-application permitted | •/- | - |
| Installation type | | indoor area (ventilation valves!) |
| Protection against electric shock (EN 61140) | | II |
| Case material | | polycarbonate |
| RoHS-conformity (2011/65/EU) | •/- | • |
| Case colour | | similar RAL 7046 |
| Cover | | transparent |
| Mounting method | | wall mounting |
| Locking system | | without tool |

| MISCELLANEOUS | | |
|---|---|---|
| Customs tariff number | | 85371098 |



The text and illustrations correspond to the technical status at the time of printing, subject to change without notice. Despite carefus editing, all information is without guarantee. Liability is excluded. ©enwitec electronic GmbH

# DATA SHEET

Art.Nr. 10012569

BATTERY-BACKUP-DISTRIBUTION | 3PH_SMA.SI_BBDAP_35KW_3PH_PREP_DACH

enwitec electronic GmbH
Scherrwies 2 | 84329 Wurmannsquick
Mail info@enwitec.eu
www.enwitec.eu

## EC DECLARATION OF CONFORMITY

| | | |
|---|---|---|
| The product, | desogmatopm: | **3PH_SMA.SI_BBDAP_35KW_3PH_PREP_DACH** |
| | article number: | **10012569** |
| | manufacturer: | **enwitec electronic GmbH<br>Scherrwies 2<br>84329 Rogglfing** |
| | description: | **Battery-Backup-Distribution SMA Flexible Storage System** |

to which this declaration relates, is in conformity to the following standards or normative documents:

| | |
|---|---|
| **EN 61439-1** | **Low-voltage switchgear and controlgear assemblies** |
| **EN 61439-2** | **Power switchgear and controlgear assemblies** |
| **EN 61439-3** | **Installation distributor for non-professional operation** |

and is in accordance with the provisions of the following EC-directives:

**Low-voltage directive 2014/35/EU**

**Restriction of Hazardous Substances Directive 2011/65/EU (RoHS)**

Year of affi xing CE-marking: **2014**

Date of issue: **24.08.2017**

enwitec electronic GmbH



Name / Signature

Johann Wimmer
CEO



The text and illustrations correspond to the technical status at the time of printing, subject to change without notice. Despite carefus editing, all information is without guarantee. Liability is excluded. ©enwitec electronic GmbH