DATA SHEET

enwitec electronic GmbH
Scherrwies 2 | 84329 Wurmannsquick
Mail info@enwitec.eu
www.enwitec.eu

Art.Nr. 10015585

SWITCHOVER BOX Fronius SYMO GEN24 Plus „Full Backup“ | 3PH_FRO_BBD3P_20KW_3PH_FRT_NA_TELE_QU

Type designation	Switchover Box for Fronius SYMO GEN24 Plus - three-pole - incl. FRT, protection relay (mains protection relay) and manually operated source changeover switch*
Application	Fronius SYMO GEN24 Plus System „Full Backup“
Region	Austria
Battery inverter	Symo GEN24 6.0 Plus/8.0 Plus/10.0 Plus
Monitoring & control	Fronius Smart Meter TS65A-3 „Touchscreen“ is integrated
Grid structure	3PH 230/400 V - TN-S system, **NO** TN-C in customer's! **NO** TT system!

* Changeover of backup loads to grid is doable, if the protection relay won'taccept the mains frequency since it's feeded by a generator (utilities' emergency power system) and the grid decouplin contactor isn't enabled as a result.

All values in [mm]
Dimensions „blue“
Fastening points „orange“

Inner construction as well as choice of components may differ within the variants!

Minimum distances

top	200
bottom	400
lateral	200
front	1200

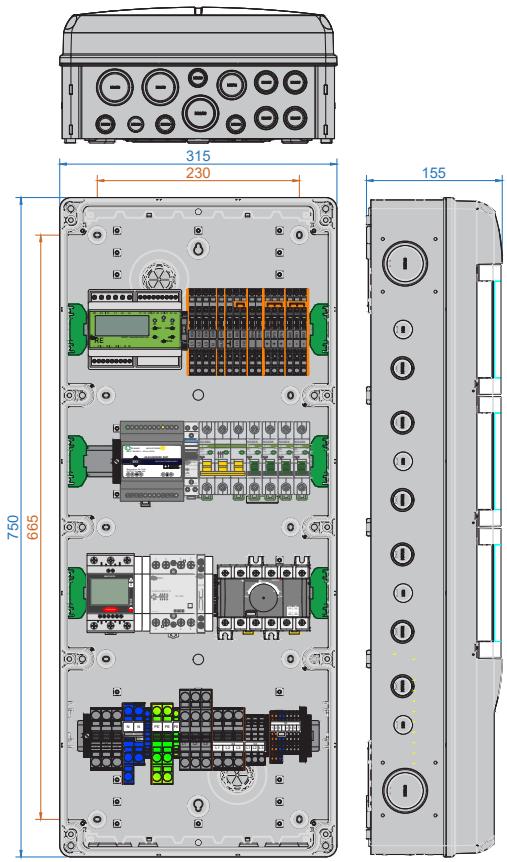

SCOPE OF DELIVERY

Quantity	Designation	Quantity	Designation
1	Installation instructions	1	Set protective cover for Fronius Smart Meter
1	Operating instructions Fronius Smart Meter	1	Set cover caps for fastening screws
1	Fronius label „Backup power“	2	Cable gland M20 incl. locknut
1	Warning label „dangerous voltage“	4	Cable gland M32 incl. locknut
1	Documentation Tele NA003-M64 (brief instruction, manufacurers declaration, test reports etc.)	3	Cable gland M40 incl. locknut

The text and illustrations correspond to the technical status at the time of printing, subject to change without notice. Despite carefus editing, all information is without guarantee. Liability is excluded. ©enwitec electronic GmbH

enwitec electronic GmbH
Scherrwies 2 | 84329 Wurmannsquick
Mail info@enwitec.eu
www.enwitec.eu

INTERCONNECTION ENVIRONMENT - SYMO GEN24 PLUS

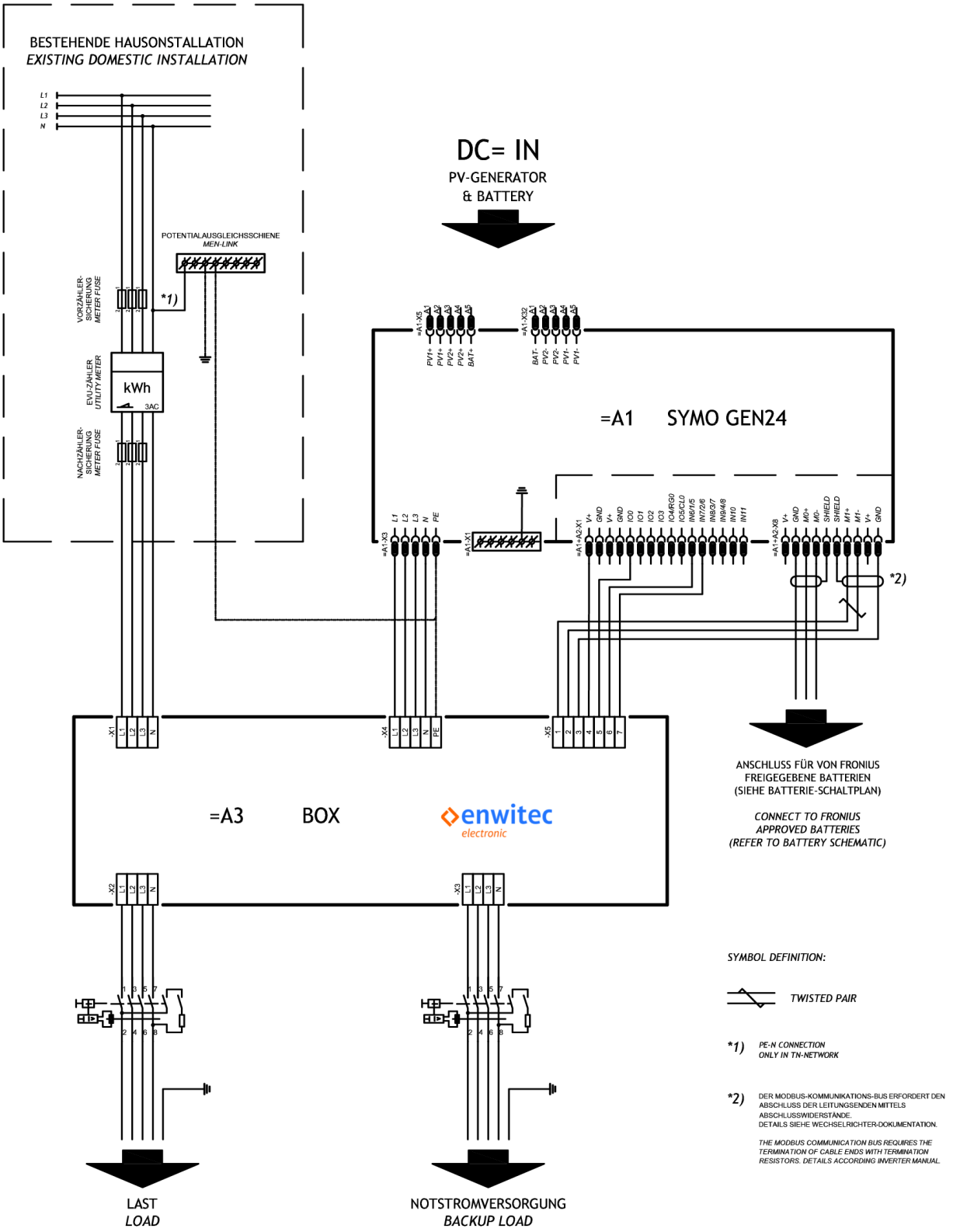

The text and illustrations correspond to the technical status at the time of printing, subject to change without notice. Despite carefus editing, all information is without guarantee. Liability is excluded. ©enwitec electronic GmbH

enwitec electronic GmbH
Scherrwies 2 | 84329 Wurmannsquick
Mail info@enwitec.eu
www.enwitec.eu

INTERNAL CIRCUITRY

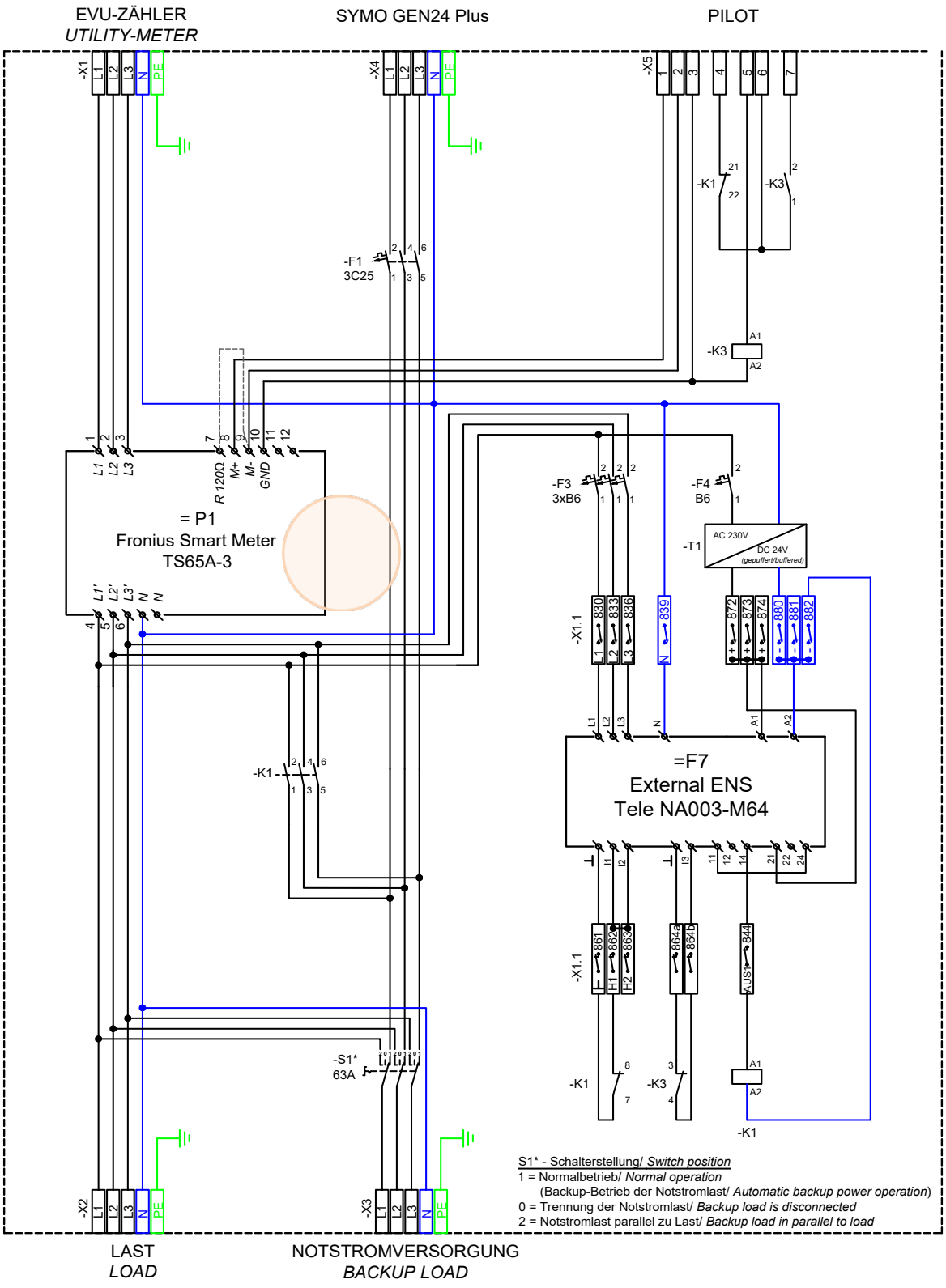

The text and illustrations correspond to the technical status at the time of printing, subject to change without notice. Despite carefus editing, all information is without guarantee. Liability is excluded. ©enwitec electronic GmbH

enwitec electronic GmbH
Scherrwies 2 | 84329 Wurmannsquick
Mail info@enwitec.eu
www.enwitec.eu

CABLE ENTRY

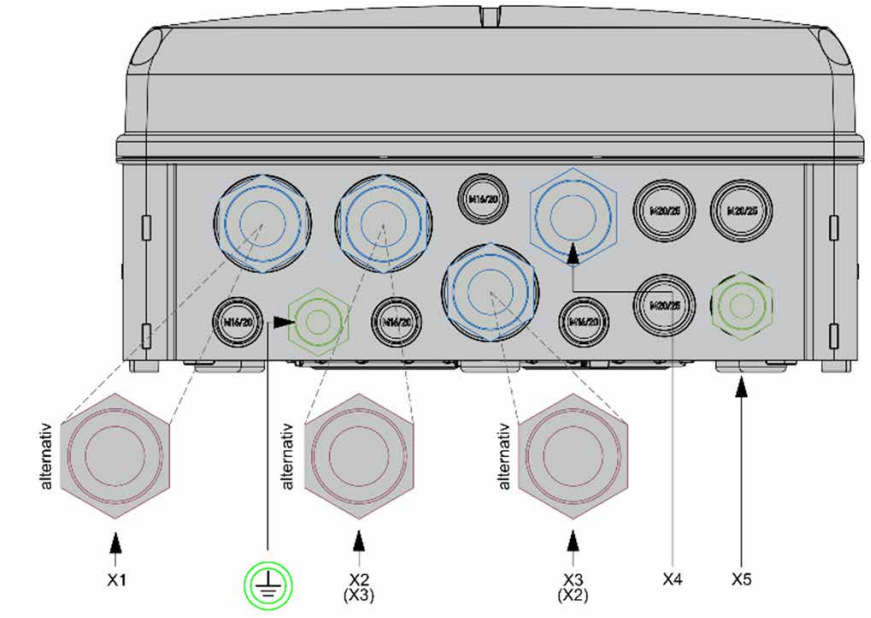

Cable gland	Terminal block	Clamping range [mm]	Wire type	Cross section [mm²]	Stripping length [mm]
M32 M40	X1 – Grid	19 - 25 16 - 28	solid /stranded fine stranded fine stranded + wire end ferrule	16 25 16	18 - 20
M32 M40	X2 – Load „Standard“	19 - 25 16 - 28	solid /stranded fine stranded fine stranded + wire end ferrule	16 25 16	18 - 20
M32 M40	X3 – Load „Backup“	19 - 25 16 - 28	solid /stranded fine stranded fine stranded + wire end ferrule	16 25 16	18 - 20
M32	X4 – Symo GEN24 Plus	19 - 25	solid /stranded fine stranded fine stranded + wire end ferrule	10 10 6	13 - 15
M20	X5 – Data cable	6 - 13	solid /stranded fine stranded fine stranded + wire end ferrule	2,5 2,5 1,5	10 - 12
M20	PE – equipotential bonding rail	6 - 13	solid /stranded fine stranded fine stranded + wire end ferrule	16 25 16	18 - 20

The text and illustrations correspond to the technical status at the time of printing, subject to change without notice. Despite carefus editing, all information is without guarantee. Liability is excluded. ©enwitec electronic GmbH

enwitec electronic

enwitec electronic GmbH
Scherrwies 2 | 84329 Wurmannsquick
Mail info@enwitec.eu
www.enwitec.eu

GENERAL DATA

NOMINAL VALUES			• applicable / - not applicable
Rated voltage		[V]	3PH - 230/400
Rated insulation voltage		[V]	400
Operating frequency		[Hz]	50/60+/-5%
Max. prospective* short circuit current		[kA]	10
Permitted grid structure			TN-S
Grid disconnection			three-pole
Max. grid-side packup fuse (gL/gG)		[A]	63
Max. thermal throughput power	ta = 40°C ta = 25°C	[kW]	20 30#
Standby-loss, ca.		[W]	8

CIRCUIT BREAKERS			
F1	Symo GEN24 Plus	MCB [A]	3C25
F3	Measuring circuit	MCB [A]	3 x B6
F4	Power supply T1	MCB [A]	B6

CONTACTORS (IEC/EN 61095; IEC/EN60947-1; IEC 60947-5-1)			
K1	Grid disconnection	AC1 [A]	63
K3	Communication	AC1 [A]	20
K1	Control voltage	[VDC]	24
K3	Control voltage	[VDC]	12
Hum-free		•/-	•

ENERGY METER		
Manufacturer		Fronius
Type		TS65A-3

MAINS PROTECTION RELAY		
Manufacturer		Tele
Type		NA003-M64
Presetting (Standard)		OVE TOR R25 NS ASYNC
Test-disconnect terminal blocks	•/-	•
Power supply (buffered)	[VDC]	24

* Is the maximum, unaffected continuous short-circuit current of the mains connection.

When operating the switchover box with 30KW max. thermal throughput power, the use of 2 x ventilation valves is required (diagonal air flow – positioning bottom left and top right e.g.; knockouts are available)
Protection class is being reduced to IP44.

The text and illustrations correspond to the technical status at the time of printing, subject to change without notice. Despite carefus editing, all information is without guarantee. Liability is excluded. ©enwitec electronic GmbH

enwitec electronic

enwitec electronic GmbH
Scherrwies 2 | 84329 Wurmannsquick
Mail info@enwitec.eu
www.enwitec.eu

TECNICAL DATA

MANUALLY OPERATED SOURCE CHANGEOVER SWITCH (S1)		• zutreffend / - nicht zutreffend
Operational current AC21	AC [A]	63

GENERAL DATA		
Dimensions W x H x D (without cable glands)	[mm]	315 x 750 x 155
Weight, ca.	[kg]	12
Operating temperature range t_a	[°C]	-5...+40
Temperature - transport/storage (24 h. 70°C)	[°C]	-25...+55
Humidity - condensing allowed	•/-	-
Humidity - permitted range	[%]	5...95
Max. altitude above sea level N.N.	[m]	2000
Protection class IP (EN 60529) ta = 40°C ta = 25°C	IP	65 44[#]
outdoor-application permitted	•/-	-
Installation type		indoor
Protection against electric shock (EN 61140)		II
Case material		polycarbonate
RoHS-conformity (2011/65/EU)	•/-	•
Case colour		similar RAL 7035
Cover		transparent
Mounting method		wall mounting
Locking system		without tool

MISCELLANEOUS	
Customs tariff number	85371098

ACCESSORY (not included in scope of delivery)	
# Set of ventilation valves – order number Consisting of: 2 x Ventilation valve – order number 2 x Reduction adaptor 2 x Locknut	10017652 (enwitec) 036579 (LeGrand) M40/M32 M40

[#] When operating the switchover box with 30KW max. thermal throughput power, the use of 2 x ventilation valves is required (diagonal air flow – positioning bottom left and top right e.g.; knockouts are available)
Protection class is being reduced to IP44.

The text and illustrations correspond to the technical status at the time of printing, subject to change without notice. Despite carefus editing, all information is without guarantee. Liability is excluded. ©enwitec electronic GmbH

enwitec electronic GmbH
Scherrwies 2 | 84329 Wurmannsquick
Mail info@enwitec.eu
www.enwitec.eu

EC DECLARATION OF CONFORMITY

The product,	designation:	**3PH_FRO_BBD3P_20KW_3PH_FRT_NA_TELE_QU**
	article number:	**10015585**
	manufacturer:	**enwitec electronic GmbH** **Scherrwies 2** **84329 Rogglfing**
	description:	**Switchover Box for Fronius system Symo GEN24 Plus - „Full Backup“**

to which this declaration relates, is in conformity to the following standards or normative documents:

EN 61439-1	**Low-voltage switchgear and controlgear assemblies**
EN 61439-2	**Power switchgear and controlgear assemblies**
EN 61439-3	**Distribution boards intended to be operated by Ordinary persons (DBO)**

and is in accordance with the provisions of the following EC-directives:

Low-voltage directive 2014/35/EU

Restriction of Hazardous Substances Directive 2011/65/EU (RoHS)

Year of affi xing CE-marking: **2021**

Date of issue: **17.11.2020**

enwitec electronic GmbH



Name / Signature

Johann Wimmer
CEO

The text and illustrations correspond to the technical status at the time of printing, subject to change without notice. Despite carefus editing, all information is without guarantee. Liability is excluded. ©enwitec electronic GmbH