PRELIMINARY | GERMANY | AUSTRIA | SWITZERLAND | DATA SHEET



IQ Battery 5P with FlexPhase

IQ Battery 5P with FlexPhase is an all-in-one AC-coupled system, that is powerful, reliable, simple, and safe. The battery can be flexibly used in both 1-phase and 3-phase applications. It has a total usable energy capacity of 5.0 kWh and includes six embedded IQ8T-BAT Microinverters providing up to 3.84 kVA continuous power in 1-phase configuration and 1.28 kVA continuous power per phase in 3-phase configuration.

Components of the Enphase Energy System



IQ System Controller 3 INT

The system controller is an integrated enclosure containing all components necessary for backup operation in case of grid outage.



IQ Microinverters

IQ Series Microinverters pack more power into less space than other rooftop solar systems and make rooftop solar more productive, reliable, smart, and safe.



IQ Combiner 2 EU 3P

The IQ Combiner 2 EU 3P is a pre-wired plug-and-play solution with IQ Gateway Metered, IQ Relays, Communications Kit 2, circuit breakers, and RCD.



IQ Battery 5P with FlexPhase accessories

The lifting handles are reusable and ease the installation process. The pedestal enables floor mounting of the battery.

Enphase 15 year warranty

CE

Powerful

- Provides up to 3.84 kVA continuous power in 1-phase configuration and 1.28 kVA continuous power per phase in 3-phase configuration
- Includes six embedded IQ8T-BAT Microinverters

Reliable

- 15-year limited warranty
- Cools passively with no moving parts or fans
- Uses wired communication for fast and consistent connection
- Updates software and firmware remotely

Simple

- Fully integrated AC-coupled battery system
- Installs and commissions easily
- Supports Self-Consumption and Full Backup modes. Supports AI-based optimization to handle dynamic tariffs
- Offers homeowners remote monitoring and control from the Enphase App
- Field replaceable components

Safe

- Meets UL 9540A, the highest industry standard for battery safety
- Uses lithium iron phosphate (LFP) chemistry for maximum safety and longevity

© 2024 Enphase Energy. All rights reserved. Enphase, the e and CC logos, IQ, and certain other marks listed at https://enphase.com/trademark-usage-guidelines are trademarks of Enphase Energy, Inc. in the U.S. and other countries.
Data subject to change.

IQ Battery 5P with FlexPhase

PRODUCT DETAILS			
Order code	—	IQBATTERY-5P-3P-INT	
Description	—	The IQ Battery 5P with FlexPhase is an AC-coupled battery (convertible between 1-phase and 3-phase)[1] with integrated IQ8T-BAT Microinverters and a battery management system (BMS) with battery controller	
OUTPUT	**UNITS**	**1-PHASE**	**3-PHASE**
Rated (continuous) output apparent power	kVA	3.84 or 3.68[2]	3.84 (1.28 per phase)
Rated output current	A	16.70 or 16[3]	16.7 (5.56 per phase)
Peak output current (3 seconds)[4]	A	32	32 (10.67 per phase)
Peak output current (10 seconds)[4]	A	24	24 (8 per phase)
Nominal voltage	VAC	230 V_{L-N}	230 V_{L-N}, 400 V_{L-L}
Nominal voltage range	VAC	213–253	213–253 (per phase)
Nominal frequency	Hz	50	
Nominal frequency range	Hz	47.5–51.5	
Power factor, grid-tied (adjustable)	—	0.8 leading ... 0.8 lagging	
Power factor, backup	—	1.0 leading ... 1.0 lagging	
AC round-trip efficiency[5]	%	90	
Operating modes	—	Self-Consumption, Full Backup[6]	
BATTERY MODULE	**UNITS**		
Usable capacity	kWh	5.0	
DC round-trip efficiency[7]	%	96	
Nominal DC voltage	V	76.8	
Ambient operating temperature (charging)[8]	°C	-20 to 50	
Ambient operating temperature (discharging)[9]	°C	-20 to 55	
Chemistry	—	Lithium iron phosphate (LFP)	
MECHANICAL DATA	**UNITS**		
Dimensions (H × W × D)	mm	980 × 550 × 188	
Lifting weight	kg	69.5	
Total installed weight	kg	82.95	
IQ Battery enclosure	—	Outdoor-IP55	
IQ8T-BAT Microinverter enclosure	—	Outdoor-IP67	
Cooling	—	Natural convection	
Relative humidity (non-condensing)	%	5–95	
Altitude	m	<2500	
Mounting	—	Wall-mount (included) or pedestal-mount (sold separately)	
COMMUNICATION INTERFACES			
Communication	—	Wired control communication	
Monitoring	—	Enphase Installer Platform and Enphase App monitoring options; API integration	
STANDARDS			
Grid compliance	—	EN 62040.1, VDE AR-N 4105:2018, TOR Erzeuger Typ A V1.2 2022, ÖVE Richtlinie R25:2020-03	
EMI	—	CE, EFT, ESD, Surge, Voltage dips and interruptions, CRF	
Battery cell module	—	IEC 62619:2017, UN 38.3, UL1973	
Inverter	—	EN 62109-1, EN 62109-2, EN 62909-1:2017, EN 50549-1:2019	
EC Declaration of Conformity[10]	—	Directive 2014/30/EU on electromagnetic compatibility (EMC), Directive 2014/35/EU (Low Voltage Directive, LVD), Directive 2011/65/EU on restrictions of the use of certain dangerous substances in electrical and electronic equipment (RoHS), Directive EU2014/53/EU on the making available on the market of radio equipment (Radio Equipment Directive, RED), Battery Directive 2006/66/EC	

[1] Factory default configuration is set to 1-phase. To switch to a 3-phase configuration, refer to the instructions provided in the QIG.
[2] The continuous apparent power output for 1-phase configuration is 3.68 kVA for Austria and Switzerland.
[3] The rated output current for 1-phase configuration is 16 A for Austria and Switzerland.
[4] During backup operation.
[5] AC to battery to AC at 1.92 kVA power rating, at 25°C and at the beginning of life.
[6] For the Backup mode, the IQ System Controller 3 INT is required.
[7] At the beginning of life.
[8] Reduction in charging power will occur at temperatures below 15°C and above 45°C.
[9] Reduction in discharge power will occur at temperatures below 5°C and above 50°C.
[10] Full text of the EU Declaration of Conformity (DoC) is available at https://www.enphase.com.

LIMITED WARRANTY	
Limited warranty	>60% capacity, up to 15 years or 6000 cycles[11]
WHAT'S IN THE BOX (ORDER CODE: IQBATTERY-5P-3P-INT)	
IQ Battery 5P with FlexPhase	Base battery unit of IQ Battery 5P with six integrated IQ8T-BAT Microinverters
ID cover and conduit cover	IQ Battery ID cover along with four conduit covers, two each for the left and right sides of the unit
Bottom mounting bracket and top protective shield	Bottom mounting bracket for mounting the battery unit on the wall and one top protective shield
M5 locking screws	Two M5 locking screws for securing the battery unit on the bottom mounting bracket
M4 grounding screws	Two M4 grounding screws for securing the top protective shield on the bottom mounting bracket
M5 ID cover grounding screws	Two M5 ID cover grounding screws for the EMI/EMC requirement
Cable ties	Six cable ties for securing field cables to the unit
Control (CTRL) connector	One pre-installed and one spare CTRL connector without resistor for CTRL wiring
Control (CTRL) connector with resistor	One pre-installed and one spare CTRL connector with resistor for CTRL wiring
Quick install guide (QIG)	IQ Battery 5P with FlexPhase Installation instructions
Control (CTRL) drain connector	One pre-installed and one spare CTRL drain connector for CTRL wiring
Drill template	One drill template for marking drilling locations on the mounting surface
ACCESSORIES AND REPLACEMENT PARTS	
IQBATTERY-5P-3P-INT-RMA	Enphase IQ Battery 5P battery storage: Indoor/Outdoor (INT) for replacement
B305-CX-0550-O	IQ Battery 5P cover only (includes one ID cover)
B305-CP-096-O	IQ Battery 5P conduit plates only (includes four conduit covers, two each for left and right sides of the unit)
B05-WB-0543-O	IQ Battery 5P wall bracket only (includes one wall bracket and one top shield)
B05-PM-0550-O	IQ Battery 5P pedestal mount
IQBATTERY-HNDL-5	One set of IQ Battery 5P lifting handles (Includes one left-side and one right-side lifting handle)
B305-ACFB-080-O	IQ Battery 5P AC Filter board only (includes AC filter board PCBAs)
B305-BMSIA-0490-O	IQ Battery 5P BMS board only (includes one BMS board PCBA of INT)
B305-IICS-0524-O	IQ Battery 5P in-house control switch only. Includes one inhouse control switch preinstalled on the IQ Battery 5P wiring cover (INT)
B305-CANBI-042-O	IQ Battery 5P control communications board only (includes one control communications PCBA)
IQ8T-BAT-RMA	Enphase IQ8T-BAT Microinverter for IQ Battery 5P with Flexphase
B305-TBL-077-O	IQ Battery 5P Line terminal block
B305-TBN-077-O	IQ Battery 5P Neutral terminal block
B305-TBG-077-O	IQ Battery 5P Ground terminal block
B305-FUSE-085-O	IQ Battery 5P fuse
B305-TBJ-085-O	IQ Battery 5P Jumper
COMPATIBILITY	
IQ Combiner 2 EU 3P	X-I Q-EURO-230-3P-4-2
IQ Battery 5P	IQBATTERY-5P-1P-INT
IQ Gateway Metered	ENV-S-EM-230
IQ Relay (single-phase and three-phase)	Q-RELAY-1P-INT and Q-RELAY-3P-INT
Communications Kit 2 INT (for grid-tied operation)	COMMS-KIT-INT-02
IQ System Controller 3 INT (for backup operation)	SC100G-M230ROW
Solar inverters	IQ7, IQ8 Series Microinverters, third-party PV string inverters

[11] Whichever occurs first. Restrictions apply. The full text of the warranty is available at http://enphase.com/installers/resources/warranty.

Dimensions in mm

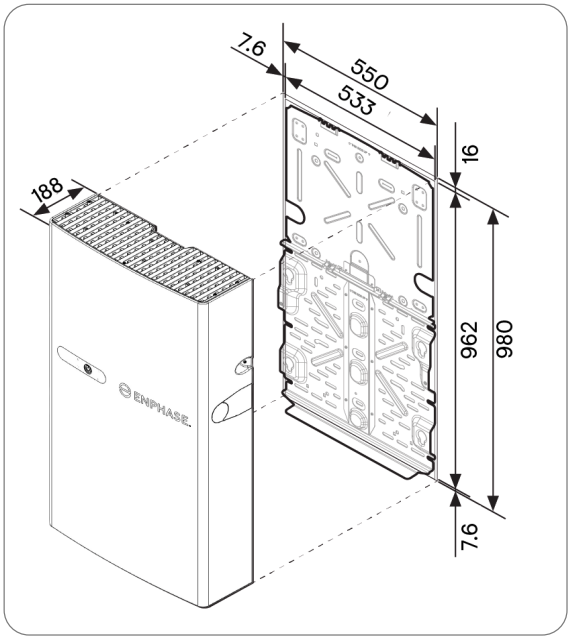

Wall-mounted

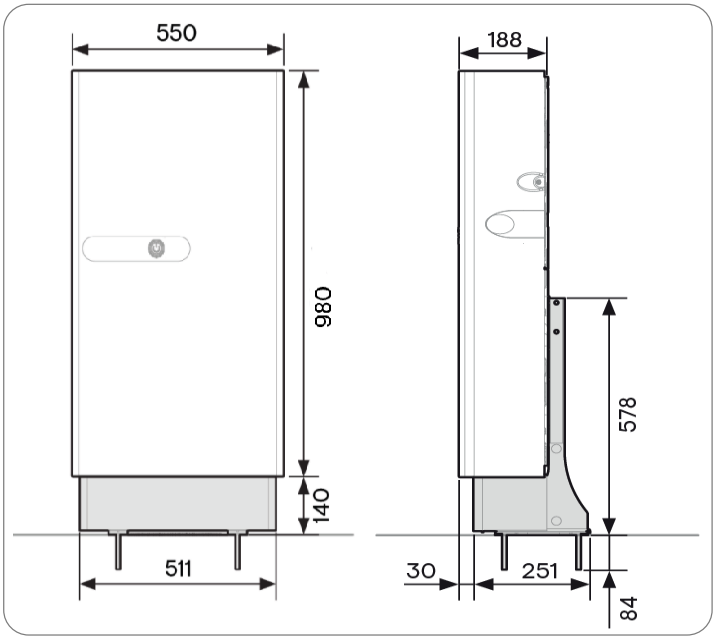

Floor-mounted with pedestal

Note for third-party products:

Any third-party manufacturer or importer of product(s) used to install or commission Enphase product(s) shall comply with the applicable EU Directive(s) and requirements in the European Economic Area (EEA). It is the responsibility of the installer to confirm that all such products are labelled correctly and have the required compliant supporting documentation.

Manufacturer: Enphase Energy Inc., 47281 Bayside Pkwy., Fremont, CA, 94538, United States of America, PH: +1 (707) 763-4784
Importer: Enphase Energy NL B.V., Het Zuiderkruis 65, 5215MV, 's-Hertogenbosch, The Netherlands, PH: +31 73 3035859
Assembled in China.

Revision history

REVISION	DATE	DESCRIPTION
DSH-00477-1.0	June 2024	Preliminary release.

© 2024 Enphase Energy. All rights reserved. Enphase, the e and CC logos, IQ, and certain other marks listed at https://enphase.com/trademark-usage-guidelines are trademarks of Enphase Energy, Inc. in the U.S. and other countries.
Data subject to change.