DATASHEET - M22-SOL-PVT45PMPI11Q



Fireman's switch, PV, 1N/O+1N/C

Part no.	**M22-SOL-PVT45PMPI11Q**
Catalog No.	**150644**
Alternate Catalog No.	**M22-SOL-PVT45PMPI11Q**
EL-Nummer (Norway)	**4300327**

Delivery program

Product range			Accessories
Products			PV off switch
Connection			for switching off the SOL30-SAFETY fireman's switch
Description			Complete device with guard-ring Release by turning
Contacts			
N/O = Normally open			1 N/O
N/C = Normally closed			1 NC
Degree of Protection			IP66, IP67, IP69
Contact sequence			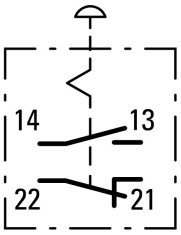

Design verification as per IEC/EN 61439

Technical data for design verification			
Rated operational current for specified heat dissipation	I_n	A	6
Heat dissipation per pole, current-dependent	P_{vid}	W	0.11
Equipment heat dissipation, current-dependent	P_{vid}	W	0
Static heat dissipation, non-current-dependent	P_{vs}	W	0
Heat dissipation capacity	P_{diss}	W	0
Operating ambient temperature min.		°C	-25
Operating ambient temperature max.		°C	70
IEC/EN 61439 design verification			
10.2 Strength of materials and parts			
10.2.2 Corrosion resistance			Meets the product standard's requirements.
10.2.3.1 Verification of thermal stability of enclosures			Meets the product standard's requirements.
10.2.3.2 Verification of resistance of insulating materials to normal heat			Meets the product standard's requirements.
10.2.3.3 Verification of resistance of insulating materials to abnormal heat and fire due to internal electric effects			Meets the product standard's requirements.
10.2.4 Resistance to ultra-violet (UV) radiation			Please enquire
10.2.5 Lifting			Does not apply, since the entire switchgear needs to be evaluated.
10.2.6 Mechanical impact			Does not apply, since the entire switchgear needs to be evaluated.
10.2.7 Inscriptions			Meets the product standard's requirements.
10.3 Degree of protection of ASSEMBLIES			Does not apply, since the entire switchgear needs to be evaluated.
10.4 Clearances and creepage distances			Meets the product standard's requirements.
10.5 Protection against electric shock			Does not apply, since the entire switchgear needs to be evaluated.
10.6 Incorporation of switching devices and components			Does not apply, since the entire switchgear needs to be evaluated.
10.7 Internal electrical circuits and connections			Is the panel builder's responsibility.
10.8 Connections for external conductors			Is the panel builder's responsibility.
10.9 Insulation properties			
10.9.2 Power-frequency electric strength			Is the panel builder's responsibility.

10.9.3 Impulse withstand voltage			Is the panel builder's responsibility.
10.9.4 Testing of enclosures made of insulating material			Is the panel builder's responsibility.
10.10 Temperature rise			The panel builder is responsible for the temperature rise calculation. Eaton will provide heat dissipation data for the devices.
10.11 Short-circuit rating			Is the panel builder's responsibility. The specifications for the switchgear must be observed.
10.12 Electromagnetic compatibility			Is the panel builder's responsibility. The specifications for the switchgear must be observed.
10.13 Mechanical function			The device meets the requirements, provided the information in the instruction leaflet (IL) is observed.

Technical data ETIM 7.0

Low-voltage industrial components (EG000017) / Selector switch, complete (EC001029)			
Electric engineering, automation, process control engineering / Low-voltage switch technology / Command and alarm device / Selector switch, complete unit (ecl@ss10.0.1-27-37-12-43 [ACN984011])			
Number of switch positions			2
Type of control element			Other
Suitable for illumination			No
With light source			No
Colour button			Red
Hole diameter		mm	22
Width opening		mm	0
Height opening		mm	0
Switching function latching			Yes
Spring-return			No
Degree of protection (IP)			IP67/IP69K
Degree of protection (NEMA)			4X
Supply voltage		V	0 - 0
Number of contacts as normally open contact			1
Number of contacts as normally closed contact			1
Number of contacts as change-over contact			0
Type of electric connection			Screw connection
With front ring			Yes
Material front ring			Plastic
Colour front ring			Other

Dimensions

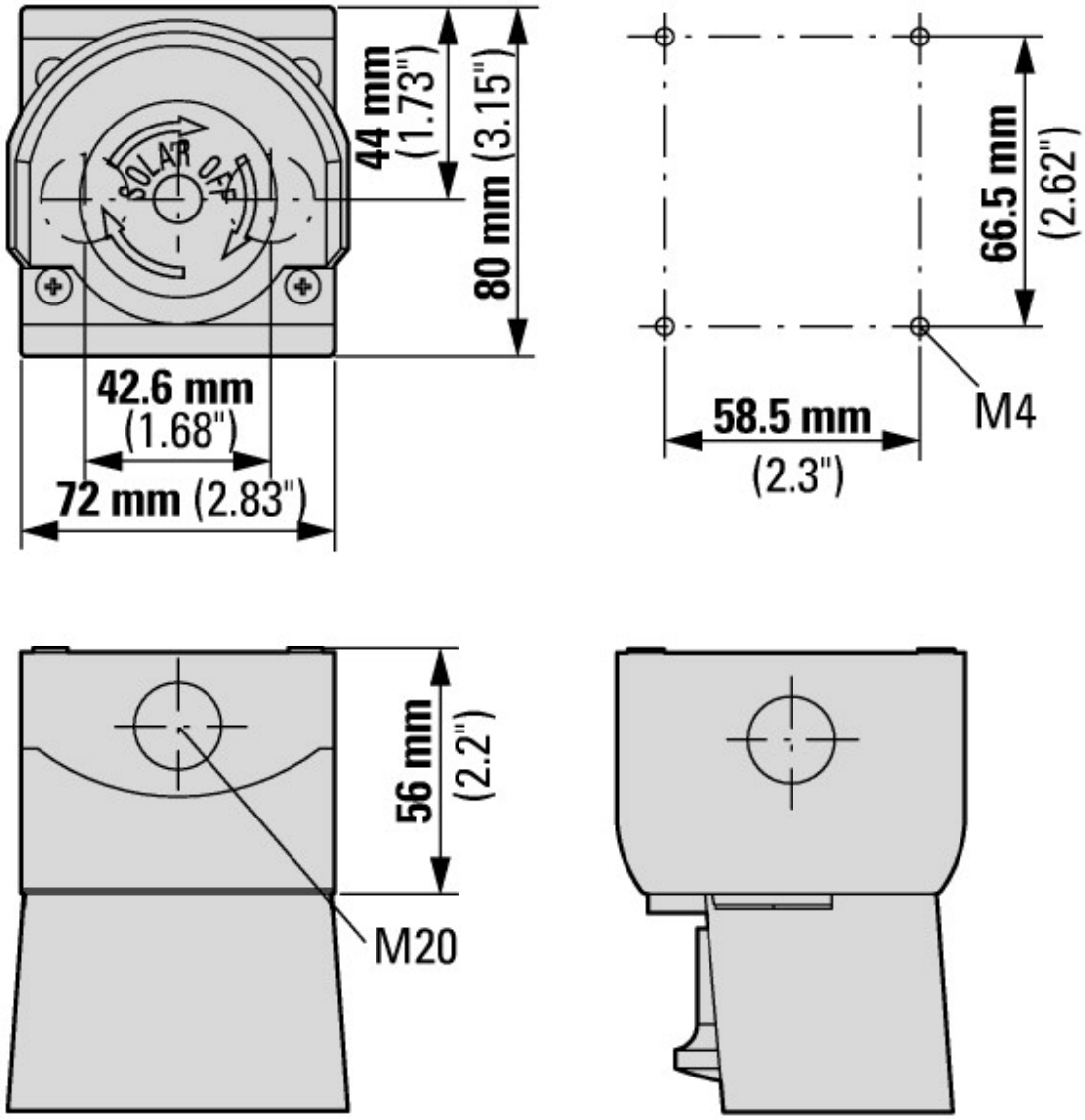

Assets (links)

Declaration of CE Conformity
00003255

Additional product information (links)

IL04716002Z (AWA1160-1745) RMQ-Titan System	
IL04716002Z (AWA1160-1745) RMQ-Titan System	ftp://ftp.moeller.net/DOCUMENTATION/AWA_INSTRUCTIONS/IL04716002Z2018_10.pdf
IL04716003Z (AWA1160-1746) RMQ-Titan System	
IL04716003Z (AWA1160-1746) RMQ-Titan System	ftp://ftp.moeller.net/DOCUMENTATION/AWA_INSTRUCTIONS/IL04716003Z2018_06.pdf

© 09/2019 by Eaton Industries GmbH