

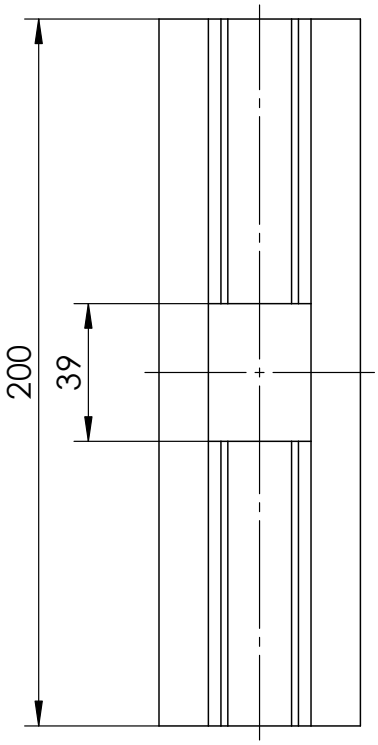

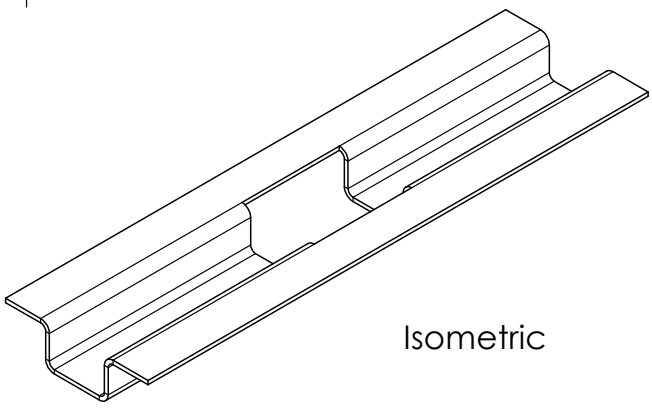

Isometric

K2 Systems GmbH
Industriestr. 18
71272 Renningen
Germany
+49 7159 42059-0

Designation:

Data sheet Dome SpeedPorter

	Name	Date	Material:	Item no.:	
Designed	M. Preiß	15.02.2016	EN AW 5754 H111	2002300	A4
Approved	M. Wiggers	12.04.2016	Surface: blank	Drawing no.: 07-015-05	All dimensions in mm
Last change	J.Dages	08.11.2021	Weight: ca. 58.1 g/pc Scale: 1:2		Sheet 1 of 1

This drawing is the sole property of K2 Systems GmbH. It is protected by copyright and may only be copied, reproduced or distributed to a third party with explicit permission!